CENTURY HEATING

Wood Stove Owner's Manual

Part 2 of 2

INSTALLATION AND OPERATION REQUIREMENTS

FW3200

(CB00023 model)

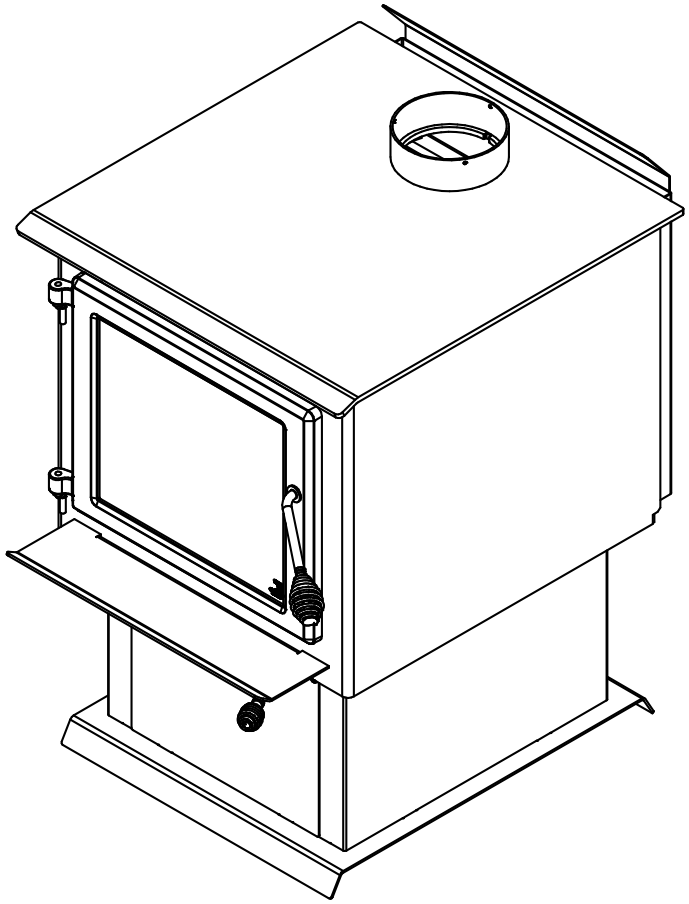

US Environmental Protection Agency phase II certified wood stove compliant with 2020 cord wood standard

EPA ≤2.5 g/h

Safety tested according to CAN/ULC S627, UL 1482 and UL 737 standards by an accredited laboratory.

ALCOVE

MOBILE HOME

ENGLISH

CONTACT LOCAL BUILDING OR FIRE OFFICIALS ABOUT RESTRICTIONS AND INSTALLATION INSPECTION REQUIREMENTS IN LOCAL AREA.

READ THIS ENTIRE MANUAL BEFORE INSTALLATION AND USE OF THIS WOOD STOVE. FAILURE TO FOLLOW THESE INSTRUCTIONS COULD RESULT IN PROPERTY DAMAGE, BODILY INJURY OR EVEN DEATH.

READ AND KEEP THIS MANUAL FOR REFERENCE

Printed in Canada

46191_IA
2025-08-13

Dealer: _____

_____

Installer: _____

_____

Phone Number: _____

Serial Number: _____

ONLINE WARRANTY REGISTRATION

If the unit requires repairs during the warranty period, proof of purchase must be provided. The purchase invoice must be kept. The date indicated on it establishes the warranty period. If it can not be provided, the warranty period will be determined by the date of manufacture of the product. It is also highly recommended to register the warranty online at

https://www.century-heating.com/en/warranty/warranty-registration/

Registering the warranty will help to quickly find the information needed on the unit.

TABLE OF CONTENTS

1. CERTIFICATION PLATE 4

2. General Information 5

2.1 Performances 5
2.2 Specifications 6
2.3 Dimensions 7
2.4 EPA Loading Procedure 9

3. Clearances to Combustible Material 13

3.1 Clearances 13

4. Floor Protection 20

5. Reducing Wall and Ceiling Clearances Safely 21

5.1 Shield Construction Rules 21

6. Installation of options on your product 24

6.1 Optional Fresh Air Intake Kit Installation 24
6.2 Optional Fire Screen Installation 25
6.3 Optional Blower Installation 26
6.4 Optional Thermodisc Installation 27
6.5 Optional Ash Pan Installation 28
6.6 Air Tubes And Baffle Installation 29
6.7 Mobile Home Installation 31

7. Maintenance/Parts Replacement 32

7.1 Replacement 32
7.2 Gasket 33
7.3 Door 33

8. Exploded Diagram and Parts List 36

CENTURY LIMITED LIFETIME WARRANTY 39

ENGLISH

1. CERTIFICATION PLATE

REFER TO INTERTEK'S DIRECTORY OF BUILDING PRODUCTS FOR DETAILED INFORMATION
SE RÉFÉRER AU RÉPERTOIRE DES PRODUITS HOMOLOGUÉS D'INTERTEK POUR PLUS D'INFORMATION

Intertek
July/Juillet 2020
Control Number (SA) : 4002461

STANDARDS / NORMES D'ESSAI:

Certified to/Certifié selon ULC S627
Certified to/Certifié selon UL 1482
Certified to/Certifié selon UL 737
Certified to/Certifié selon CSA B415.1
Certified to/Certifié selon ASTM E3053
Certified to/Certifié selon ASTM E2515

LISTED SOLID FUEL BURNING APPLIANCE
POÊLE À COMBUSTIBLE SOLIDE HOMOLOGUÉ

MODEL / MODÈLE :
FW3200

Serial Number
No. de Série
999998

Clearances to combustibles / Dégagements aux combustibles

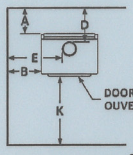

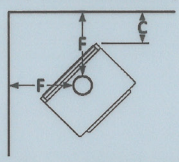

MOBILE HOME
MAISONS MOBILES
Double wall connector
Tuyau à paroi double

A: 7.5 in./po.	(191 mm)	D: 11 in./po.	(279 mm)
B: 24 in./po.	(610 mm)	E: 32.75 in./po.	(832 mm)
C: 12 in./po.	(305 mm)	F: 21.75 in./po.	(552 mm)

Back / Arrière

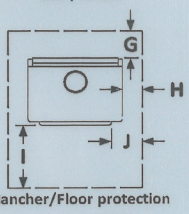

CANADA

Single wall connector Tuyau à paroi simple		Double wall connector Tuyau à paroi double	
A: 14.5 in./po.	(368 mm)	A: 7.5 in./po.	(191 mm)
B: 20 in./po.	(508 mm)	B: 20 in./po.	(508 mm)
C: 12 in./po.	(305 mm)	C: 10 in./po.	(254 mm)
D: 18 in./po.	(457 mm)	D: 11 in./po.	(279 mm)
E: 28.75 in./po.	(730 mm)	E: 28.75 in./po.	(730 mm)
F: 21.75 in./po.	(552 mm)	F: 19.75 in./po.	(502 mm)

Floor-ceiling/plancher-plafond: 84 in./po. (213cm)

U.S.A.

Single wall connector Tuyau à paroi simple		Double wall connector Tuyau à paroi double	
A: 14.5 in./po.	(368 mm)	A: 7.5 in./po.	(191 mm)
B: 20 in./po.	(508 mm)	B: 20 in./po.	(508 mm)
C: 12 in./po.	(305 mm)	C: 10 in./po.	(254 mm)
D: 18 in./po.	(457 mm)	D: 11 in./po.	(279 mm)
E: 28.75 in./po.	(730 mm)	E: 28.75 in./po.	(730 mm)
F: 21.75 in./po.	(552 mm)	F: 19.75 in./po.	(502 mm)

* See owner's manual for other clearances with lowered ceiling/
voir manuel d'installation pour autres dégagements avec plafond abaissé

Protection de plancher/Floor protection

CANADA		U.S.A.	
G: 8 in./po.	(203 mm)	I: 16 in./po.	(406 mm)
H: 8 in./po	(203 mm)	J: 8 in./po.	(203 mm)
I: 18 in./po.	(457 mm)	K: 36 in./po.	(914 mm)
K: 48 in./po.	(1219 mm)		

PREVENT HOUSE FIRES

- Install and use only in accordance with the manufacturer's installation and operating instructions.
- Contact local building or fire officials about restrictions and installation inspection in your area.
- Use listed 152 mm /6 in. diameter single or double wall connectors with prefabricated chimneys approved UL 103 HT (US) and ULC S629 (CAN) suitable for solid fuels or lined masonry chimneys.
- See local building code and manufacturer's instructions for precautions required for passing a chimney through a combustible wall or ceiling.
- This stove must be installed as a freestanding heater with the clearances listed in the manufacturer's installation instructions. It is strictly forbidden to install this stove in a factory-built fireplace.
- The space heater must be installed with pedestal provided, attached as shown in the installation instruction.
- Do not pass connector through combustible wall or ceiling.
- Do not connect this unit to a chimney serving another appliance.
- Use with wood only. Do not use other fuels.
- Operate only with door closed or door open with firescreen installed. Open door or remove firescreen to feed the stove only.
- Do not obstruct the space underneath the stove.
- Do not use grate or elevate fire. Build fire directly on hearth.
- Do not overfire. If heater or chimney connector glows, you are overfiring.
- Inspect and clean chimney frequently. Under certain condition of use, creosote buildup may occur rapidly.
- Replace glass with ceramic type only.
- Install unit on a non-combustible material extending as shown above on this label.
- Combustion air openings shall not be obstructed.
- This wood heater needs periodic inspection and repair for proper operation. Consult the owner's manual for further information. It is against US federal regulations to operate this wood heater in a manner inconsistent with the operating instructions in the owner's manual.

PRÉVENEZ LES INCENDIES

- Installer et utiliser conformément au manuel d'utilisation du fabricant.
- Contacter les autorités de votre localité ayant juridiction concernant les restrictions et inspections d'installation.
- Utiliser des tuyaux d'évacuation à parois simple ou double homologués d'un diamètre de 6 po. (152 mm) avec une cheminée préfabriquée approuvée UL 103 HT (US) et ULC S629 (CAN) pour utilisation au bois ou une cheminée de maçonnerie gainée.
- Voir les codes locaux et le manuel d'installation du manufacturier pour le passage de la cheminée à travers un mur ou un plafond combustible.
- Ce poêle doit être installé comme appareil de chauffage autonome avec les dégagements indiqués dans les instructions d'installation du fabricant. Il est strictement défendu d'installer ce poêle dans un foyer préfabriqué.
- Le poêle doit être installé avec le piédestal fourni, fixé comme indiqué dans les instructions d'installation.
- Ne pas traverser un plafond ou un mur combustible avec un tuyau d'évacuation.
- Ne pas raccorder cet appareil à une cheminée déservant un autre appareil.
- Brûler du bois seulement. Ne pas utiliser d'autres combustibles.
- Garder la porte fermée ou le pare-étincelle en place en tout temps. Ouvrir la porte ou retirer le pare-étincelle que lors du chargement.
- Ne rien entreposer sous l'appareil.
- Ne pas utiliser de grilles ou de chenets pour surélever le feu. Préparer le feu directement sur l'âtre.
- Ne pas surchauffer. Si l'appareil ou le tuyau rougit, il y a surchauffe.
- Inspecter et nettoyer la cheminée fréquemment. Sous certaines conditions, l'accumulation de créosote peut être rapide.
- Remplacer la vitre seulement avec un verre de céramique.
- Installer l'appareil sur une plaque non combustible tel qu'indiqué sur l'étiquette.
- La protection de plancher peut varier entre la version piédestal et sur pattes. Voir le manuel d'instructions.
- Les entrées d'air servant à la combustion ne doivent pas être obstruées.
- Cet appareil de chauffage requiert des inspections et réparations périodiques. Consulter le manuel de l'utilisateur pour plus d'information. Opérer cet appareil de chauffage de façon inconsistente par rapport au manuel de l'utilisateur consiste une violation de la loi fédérale (USA).

Optional blower: AC02050 (115V, 0.8A, 60Hz)
Option ventilateur: AC02050 (115V, 0.8A, 60Hz)

U.S. ENVIRONMENTAL PROTECTION AGENCY Certified to comply with 2020 particulate emission standards using cordwood.
AGENCE DE PROTECTION DE L'ENVIRONNEMENT DES É.-U. Conforme aux normes d'émission de particules de 2020 avec bûche de bois.

Weighted average emission rate / Moyenne pondérée des émissions : 0.95 g/h
Tested and certified in compliance with CFR 40 part 60, subpart AAA, section 60.534(a)(1(ii))

WARNING: This product can expose you to carbon monoxide, which is known to the State of California to cause cancer, birth defects or other reproductive harm.
(For more information go to www.p65warnings.ca.gov)

CAUTION

- HOT WHILE IN OPERATION.
- DO NOT TOUCH. KEEP CHILDREN, CLOTHING AND FURNITURE AWAY.
- CONTACT MAY CAUSE SKIN BURNS. SEE NAME-PLATE AND INSTRUCTIONS.

ATTENTION

- CHAUD EN FONCTIONNEMENT.
- NE PAS TOUCHER. GARDER LES ENFANTS, LES VÊTEMENTS ET LES MEUBLES ÉLOIGNÉS.
- UN CONTACT AVEC LA PEAU PEUT OCCASIONNER DES BRÛLURES. VOIR LES INSTRUCTIONS.

27848

Made in St-Augustin-de-Desmaures, (Qc), Canada
30/03/2023 (# test)

SBi
Fabricant de poêles international
Stove Builder International

Fabriqué à St-Augustin-de-Desmaures, (Qc), Canada
30/03/2023 (# test)

ENGLISH

2. General Information

2.1 Performances

Values are as measured per test method, except for the recommended heating area, firebox volume, maximum burn time and maximum heat output.

Model	FW3200 (CB00023)	
Type of combustion	Non-catalytic	
Fuel Type	Dry Cordwood	
Recommended heating area (sq. ft.)[1]	900 to 2,300 ft^2 (83.6 to 213.7 m^2)	
Overall firebox volume[2]	3.4 ft^3 (0.096 m^3)	
EPA loading volume	2.67 ft^3 (0.056 m^3)	
Maximum burn time[1]	10 hours	
Maximum heat output (dry cordwood)[3]	90,000 BTU/h (26.4 kW)	
Overall heat output rate (min. to max.)[2 4]	15,841 BTU/h to 57,041 BTU/h (4.64 kW to 16.72 kW)	
Average overall efficiency[3] (Dry cordwood)	71.1 % (HHV)[5]	76.6 % (LVH)[6]
Optimum overall efficiency[7]	78 %	
Optimum heat transfer efficiency[8]	74 %	
Average particulate emissions rate[9]	0.95 g/h (EPA / CSA B415.1-10)[10]	
Average CO[11]	61.3 g/h	

ENGLISH

[1] Recommended heating area and maximum burn time may vary subject to location in home, chimney draft,heat loss factors, climate, fuel type and other variables. The recommended heated area for a given appliance is defined by the manufacturer as its capacity to maintain a minimum acceptable temperature in the designated area in case of a power failure.
[2] The overall firebox calculation is an approximation and is not intended to be used for loading. This volume includes a buffer zone to allow an easier fuel insertion, prevent ash spillage and allow the air wash to work properly.
[3] The maximum heat output (dry cordwood) is based on a loading density varying between 15 lb/ft^3 and 20 lb/ft^3. Other performances are based on a fuel load prescribed by the standard. The specified loading density varies between 7 lb/ft^3 and 12 lb/ft^3. The moisture content is between 19% and 25%.
[4] As measured per CSA B415.1-10 stack loss method.
[5] Higher Heating Value of the fuel.
[6] Lower Heating Value of the fuel.
[7] Optimum overall efficiency at a specific burn rate (LHV).
[8] The optimum heat transfer efficiency is for the low burn rate and represents the appliance's ability to convert the energy contained in the wood logs into energy transferred to the room in the form of heat and does not take into account the chemical losses during combustion.
[9] This appliance is officially tested and certified by an independent agency.
[10] Tested and certified in compliance with CFR 40 part 60, subpart AAA, section 60.534(a)(1(ii) and draft ASTM WK47329-14.
[11] Carbon monoxide.

2.2 Specifications

Recommended log length	16 in (406 mm) east-west
Maximum log length[1]	20 in (508 mm) east-west
Flue outlet diameter	6 in (150 mm)
Recommended connector pipe diameter	6 in (150 mm)
Type of chimney	ULC-S629, UL 103 HT (2100 °F)
Minimum chimney height	12 feet
Baffle material	Vermiculite
Approved for alcove installation	Yes
Approved for mobile home installation[2]	Yes
Type of door	Simple, glass with cast iron frame
Type of glass	Ceramic glass
Blower	Optional (up to 100 CFM)
Particulate emission standard[3]	EPA / CSA B415.1-10
USA standard (Safety)	UL 1482, UL 737
Canada standard (Safety)	CAN/ULC-S627

ENGLISH

[1] North-south: ends of the logs visible, East-west: sides of the logs visible.

[2] Mobile homes (Canada) or manufactured homes (USA): The US Department of Housing and Urban Development describes “manufactured homes” better known as “mobile homes” as follows; buildings built on fixed wheels and those transported on temporary wheels/axles and set on a permanent foundation. In Canada, a mobile home is a dwelling for which the manufacture and assembly of each component is completed or substantially completed prior to being moved to a site for installation on a foundation and connection to service facilities and which conforms to the CAN/CSA-Z240 MH standard.

[3] Tested and certified in compliance with CFR 40 part 60, subpart AAA, section 60.534(a)(1(ii) and draft ASTM WK47329-14.

2.3 Dimensions

2.3.1 Stove Dimensions

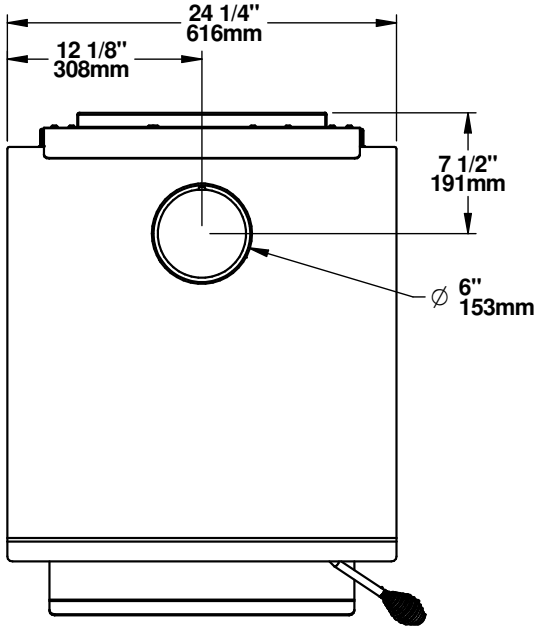

Figure 1: Top View

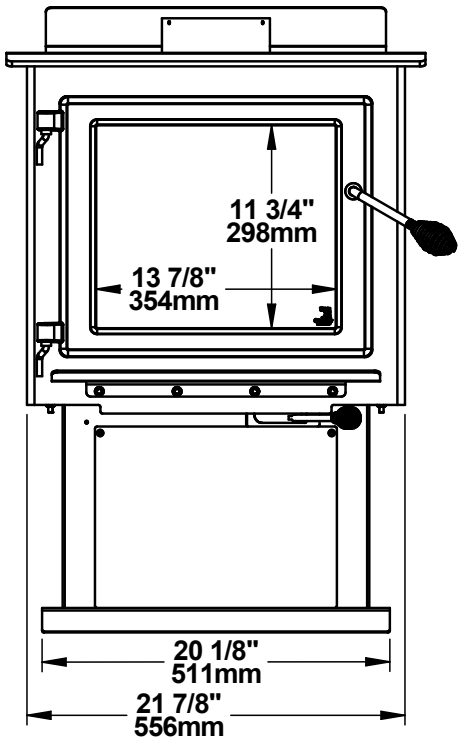

Figure 2: Front View

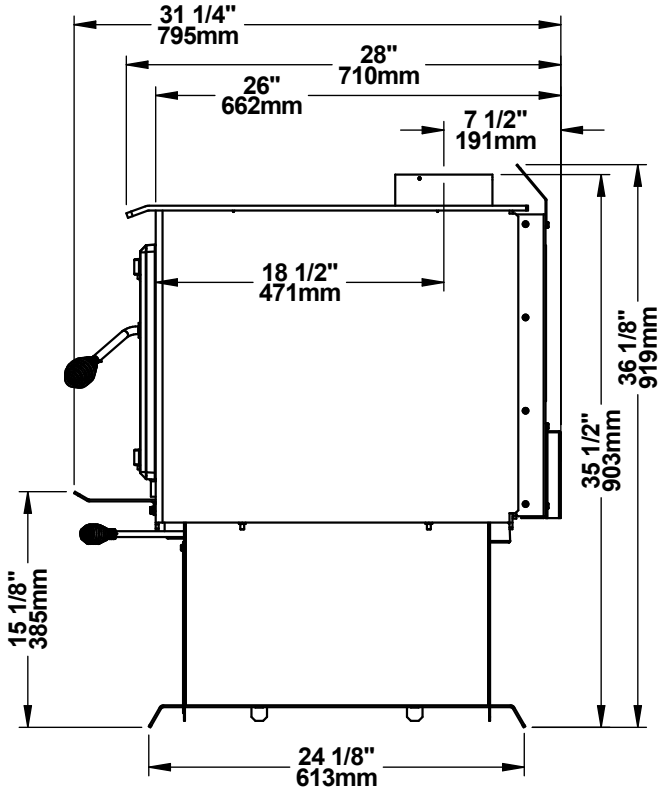

Figure 3: Side View

ENGLISH

2.3.2 Combustion Chamber Dimensions

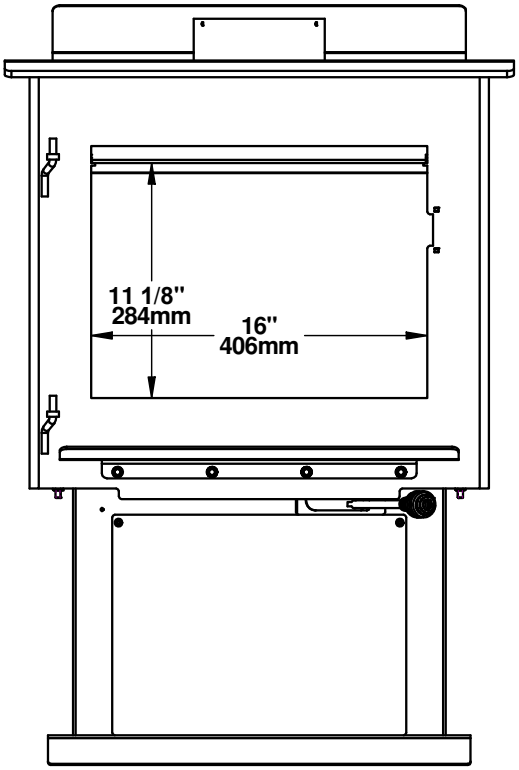

Figure 4: Door Opening

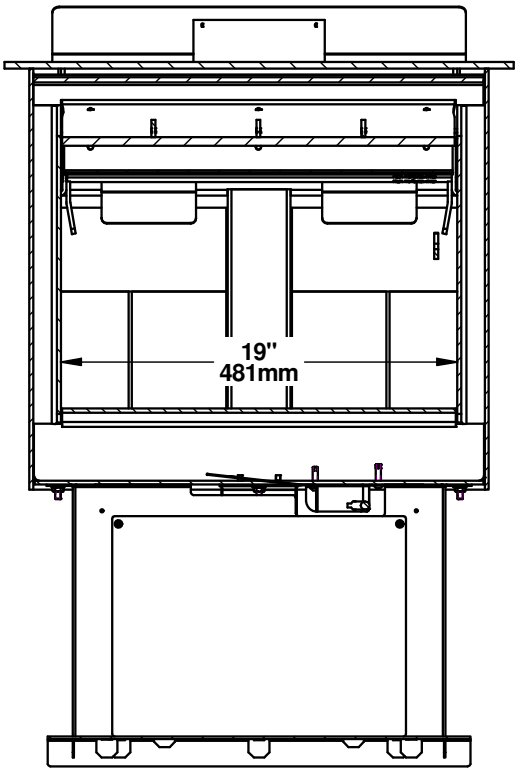

Figure 5: Front View - Combustion Chamber

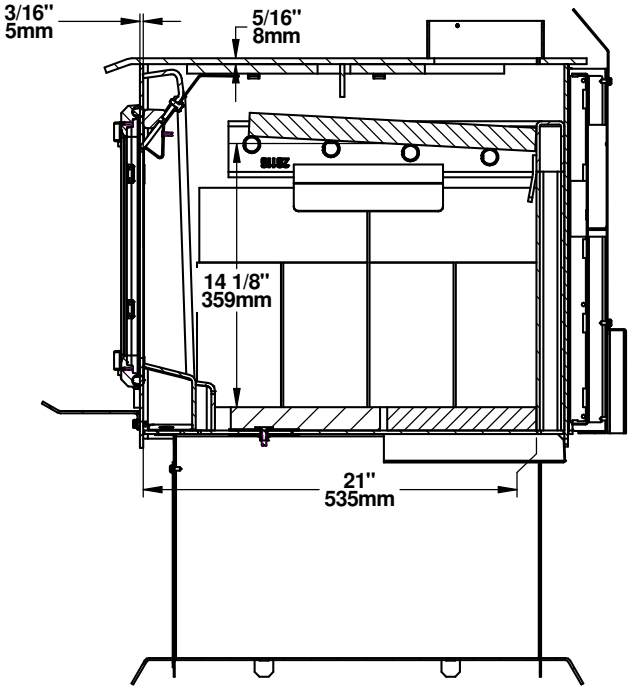

Figure 6: Side View - Combustion Chamber

ENGLISH

2.4 EPA Loading Procedure

The best loading method for efficient and clean combustion with this fireplace is the EPA loading method. The images below show the space in the firebox where the logs are to be placed. It is important to always respect this space and not to put logs in the grid area marked with an X. The marked area is defined by the space between the glass and primary air channel. Leave enough space between the logs for good air circulation. Using more than the usable firebox volume for loading wood will result in poor combustion. The Usable firebox volume of 2.67 ft^3 shown below is the one used during EPA emissions certification. The log length recommended for this stove is 16 inches and the EPA testing were done with log length of 16 in. The fuel specie used for the EPA certification was beech.

2.4.1 Air control

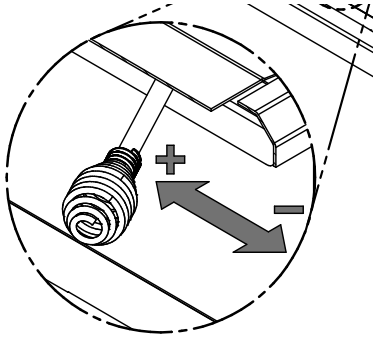

The air control is located underneath the ash shelf. To open the air control, pull the air control handle completely to the left (High). This will increase the burn rate. To close the air control, push the air control handle completely to the right. This will permit to achieve the lowest possible burn rate.

2.4.2 High burn rate (primary air control open)

For Kindling and Start-up fuel configuration refer to the pictures below. Split the start-up fuel log into 8 pieces. Crisscross at 45 degrees the 8 pieces on the brick on 3 rows (From the bottom, first row 3 pieces-second row 3 pieces - third row 2 pieces) and leaving some space between each wood pieces. Crisscross at 45 degrees the kindling on the top of the start-up fuel on 3 rows. The kindling is made of between 10-12 small pieces that are about 10% of moisture content. Place newspaper sheets on top of the kindling. Light up the paper and let the door at 90 degrees between one minute and one minute and 30 seconds, then close the door. Air control is fully open.

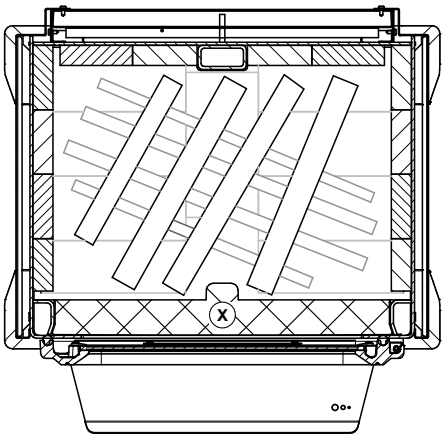

Figure 7: Start-up fuel

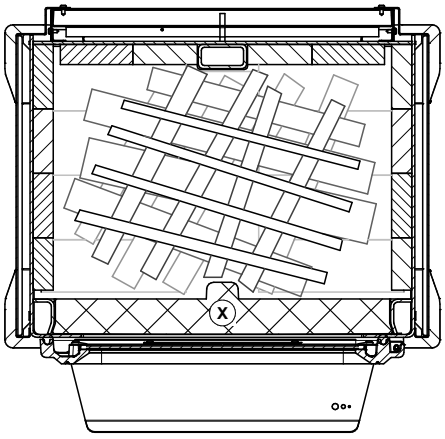

Figure 8: Kindling

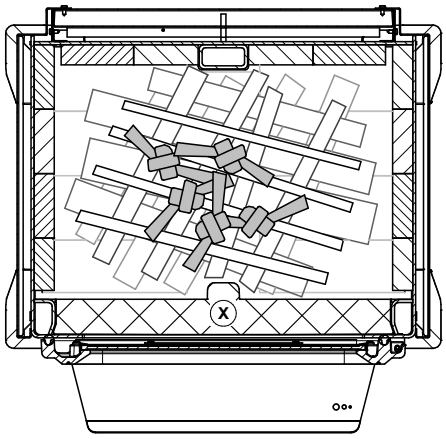

Figure 9: Newspaper

When there are only faint flames remaining and most of the wood is turned into coal, break ashes and level coal bed. Close the door.

Add High Fire load in an East-West configuration. Place the first two logs at the back of the firebox, facing east-west, one on top of the other. Leave approximately 3 inches of air space between the rear firebrick and the first log. See Figures 12 and 13 for an example load for maximum burn rate inside the combustion chamber (illustrative only). Then, place 2 logs in the

ENGLISH

middle and 2 logs in front of the combustion chamber, one on top of the other (6 logs in total). Leave one inch between log columns. Leave the door open at 90 degrees between one minute and one minute and 30 seconds. Close the door, start the fan at maximum speed and let it burn until the weight hits the target.

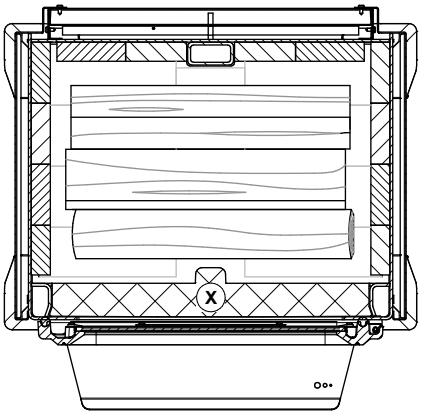

Figure 10: Position of the bottom pieces (High burn)

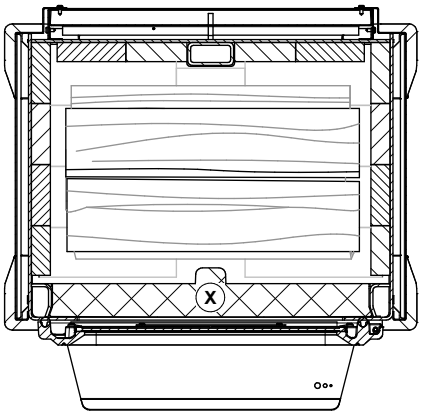

Figure 11: Position of the top pieces (High burn)

For optimal loading of a high fire, take small size fuel pieces (between 2- and 3-inches cross section dimensions approximately) in the back of the firebox and use medium to large size fuel pieces (3.5 to 4.5 inches of cross section dimensions approximately) in front of the firebox.

2.4.3 Low burn rate

After the high fire, if there is visible yellow flame, close the air control. When the charcoal bed weight is between 14 and 17% of the low fire load weight, turn off the blower, open the door, stir the coals slightly, just enough to have a level plane coal bed, and let the door remain slightly open for 1 minute before loading the low burn test fuel.

For the loading, place the first two logs at the back of the firebox, facing east-west, one on top of the other. Leave approximately 3 inches of air space between the rear firebrick and the first log. See Figures 14 and 15 for an example load for maximum burn rate inside the combustion chamber (illustrative only). Then, place 2 logs in the middle and 2 logs in front of the combustion chamber, one on top of the other (6 logs in total). Leave one inch between log columns.

For optimal loading of a low fire load, take small size fuel pieces (between 2- and 3-inches cross section dimensions approximately) in the back of the firebox and use medium to large size fuel pieces (3.5 to 4.5 inches of cross section dimensions approximately) in front of the firebox.

ENGLISH

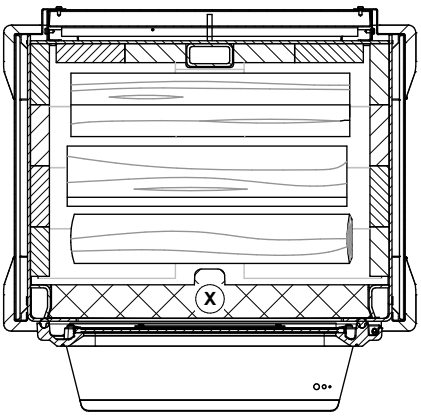

Figure 12: Position of the bottom pieces (Low burn)

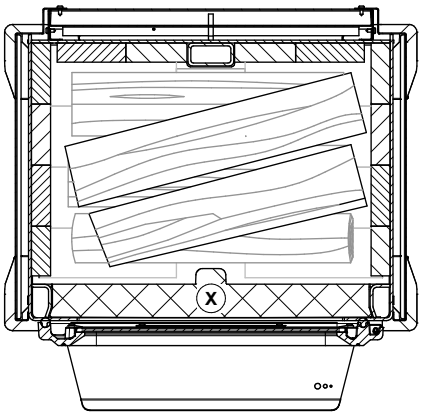

Figure 13: Position of the top pieces (Low burn)

Let the door ajar at 90° until the flames roll on top of the fuel (between 2:00 and 4:00 minutes) and then close the door with the primary air control open. See picture below for rolling flame:

Close the primary air control by small increments (ex: 1/16 of an inch), from ½" to fully closed, between 4 and 15 minutes after the loading period. Before closing further, make sure the flame intensity is increasing or stable. Close the air control completely. Turn ON the blower at minimum speed after 30 minutes.

2.4.4 Medium burn rate

After the high fire, if there is visible yellow flame, close the air control. When the charcoal bed weight is between 14 and 17% of the medium fire load weight, turn off the blower, open the door, stir the coals slightly, just enough to have a level plane coal bed, and let the door remain slightly open for 1 minute before loading the medium burn test fuel.

For the loading, place the first two logs at the back of the firebox, facing east-west, one on top of the other. Leave approximately 3 inches of air space between the rear firebrick and the first log. See Figures 16 and 17 for an example load for maximum burn rate inside the combustion chamber (illustrative only). Then, place 2 logs in the middle and 2 logs in front of the combustion chamber, one on top of the other (6 logs in total). Leave one inch between log columns.

For optimal medium fire load,take small size fuel pieces (between 2- and 3-inches cross section dimensions approximately) in the back of the firebox and use medium to large size fuel pieces (3.5 to 4.5 inches of cross section dimensions approximately) in front of the firebox.

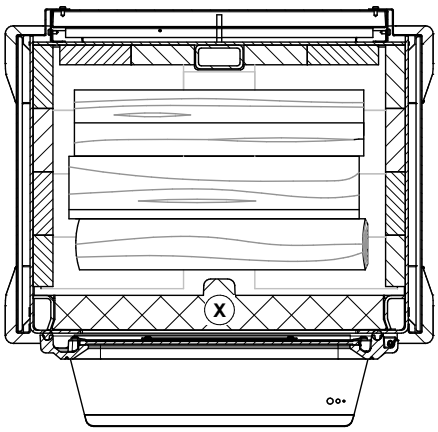

Figure 14: Position of the bottom pieces (Medium burn)

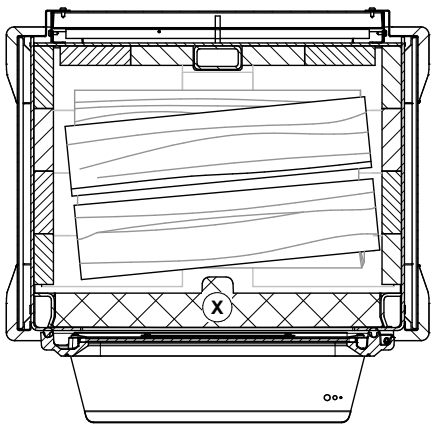

Figure 15: Position of the top pieces (Medium burn)

Let the door ajar at 90° until the flames roll on top of the fuel (between 2:30 and 5:00) and then close the door with the primary air control open. See picture below for rolling flame:

Close the primary air control by small increments (ex: 1/16 of an inch) until reaching 1/4in before closed position, between 4 and 15 minutes after the loading period. Before closing further, make sure the flame intensity is increasing or stable. Turn ON the blower at minimum speed after 30 minutes.

ENGLISH

3. Clearances to Combustible Material

The clearances shown in this section have been determined by tests according to procedures set out in safety standards CAN/ULC S627 (Canada), UL 1482 (U.S.A.) and UL 737 (U.S.A.). When the stove is installed so that its surfaces are at or beyond the minimum clearances specified, combustible surfaces will not overheat under normal and even abnormal operating conditions.

No part of the stove or flue pipe may be located closer to combustibles than the minimum clearance figures given.

Clearances may only be reduced by means approved by the regulatory authority.

The clearances to combustible walls may be slightly different in Canada and the U.S.A. and may also differ depending on whether single or double wall flue pipe is used. Make sure to choose the correct clearance for the stove location and type of flue pipe.

The clearances of the appliance and the flue pipes must be met individually, meaning the appliance cannot be installed closer to the combustible materials than the single or double wall pipe allows. For a safe way to reduce clearances refer to section"5. Reducing Wall and Ceiling Clearances Safely" of this manual.

3.1 Clearances

	APPLIANCE CLEARANCES WITH SINGLE WALL PIPE CONNECTOR	
	Canada	**USA**
A	14 ½" (368 mm)	14 ½" (368 mm)
B	20" (508 mm)	20" (508 mm)
C	12" (305 mm)	12" (305 mm)

	APPLIANCE CLEARANCES WITH DOUBLE WALL PIPE CONNECTOR	
	Canada	**USA**
A	7 ½" (191 mm)	7 ½" (191 mm)
B	20" (508 mm)	20" (508 mm)
C	10" (254 mm)	10" (254 mm)

If the above clearances are met, then the distances measured from the flue outlet will be:

	DISTANCES[1] FROM PIPE CONNECTOR WITH SINGLE WALL PIPE CONNECTOR	
	Canada	**USA**
D	18" (457 mm)	18" (457 mm)
E	28 ¾" (730 mm)	28 ¾" (730 mm)
F	21 ¾" (552 mm)	21 ¾" (552 mm)

	DISTANCES[1] FROM PIPE CONNECTOR WITH DOUBLE WALL PIPE CONNECTORE	
	Canada	**USA**
D	11" (279 mm)	11" (279 mm)
E	28 ¾" (730 mm)	28 ¾" (730 mm)
F	19 ¾" (502 mm)	19 ¾" (502 mm)

ENGLISH

[1] The pipe distances listed in this table refer to the distances obtained when the stove is installed in accordance with the appliance clearances above mentioned.

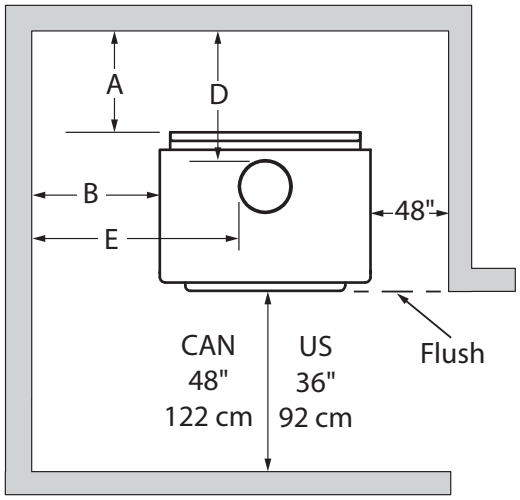

Figure 16: Clearances - Top

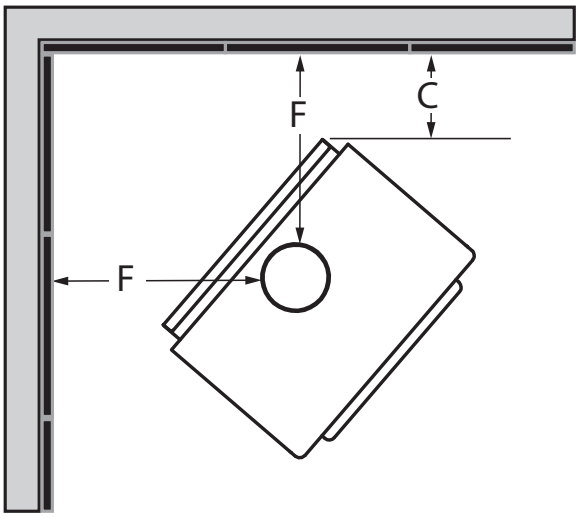

Figure 17: Clearances - Corner

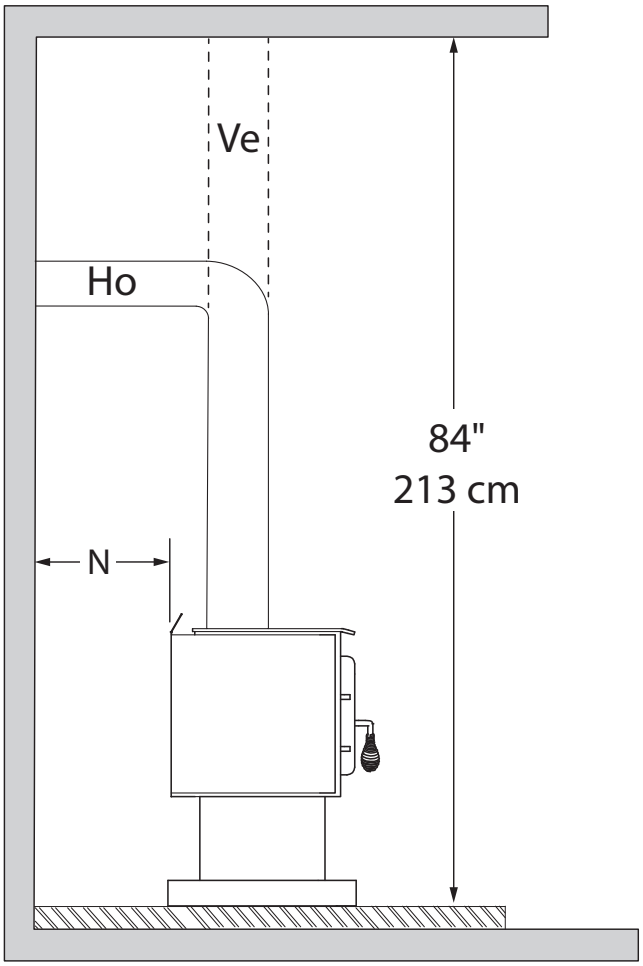

Figure 18: Clearances - Side

ENGLISH

3.1.1 With Heat Shield AC02762[1]

To reduce the clearances of an appliance using a single wall pipe connector, the use of a heat shield certified with the single wall pipe connector to be used as close as 6" from combustible materials must be used. Only in this case, the same clearances as a certified double wall pipe connector can be used. Refer to the booklet in the screen options to obtain the dimensions to be respected.

	APPLIANCE CLEARANCES WITH DOUBLE WALL PIPE CONNECTOR	
	Canada	**USA**
A	3" (76 mm)	3" (76 mm)
B	3" (76 mm)	3" (76 mm)
C	3" (76 mm)	3" (76 mm)

	DISTANCES[2] FROM DOUBLE WALL PIPE CONNECTOR	
	Canada	**USA**
D	6 ½" (165 mm)	6 ½" (165 mm)
E	11 ¾" (298 mm)	11 ¾" (298 mm)
F	12 ¾" (324 mm)	12 ¾" (324 mm)

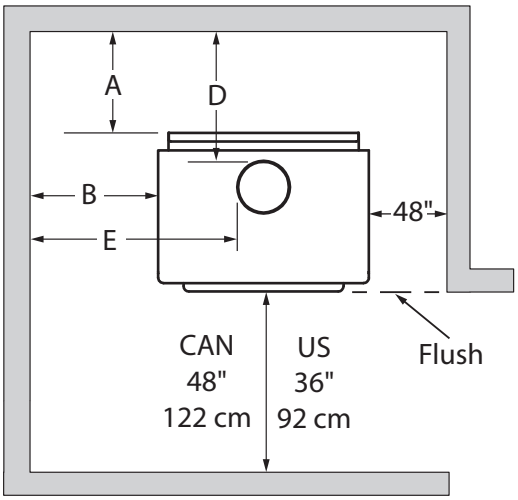

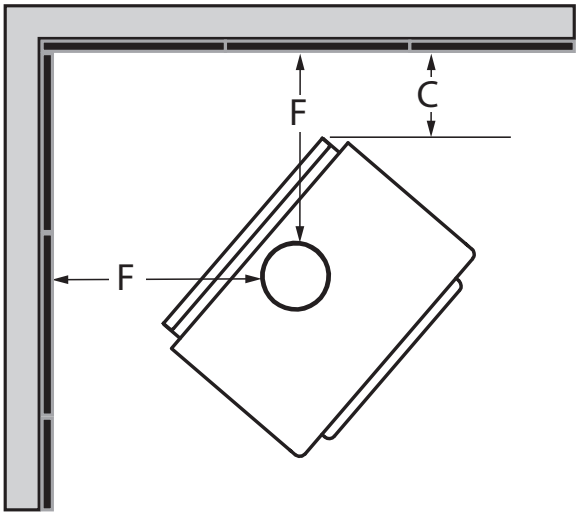

If the clearance reduction is on the same side as the door handle, position the stove at a minimum of 6 inches from the side wall (clearance B), otherwise it may be located at the clearance shown in the table above.

ENGLISH

[1] Note that to reduce the clearances of an appliance using a single wall pipe connector, the use of a heat shield certified with the single wall pipe connector to be used as close as 6" from combustible materials must be used. Only in this case, the same clearances as a certified double wall pipe connector can be used.

[2] The pipe distances listed in this table refer to the distances obtained when the stove is installed in accordance with the appliance clearances above mentioned.

3.1.2 With Lowered Ceiling

	APPLIANCE CLEARANCES WITH SINGLE WALL PIPE CONNECTOR	
	Canada	**USA**
A	14 ½" (368 mm)	14 ½" (368 mm)
B	20" (5078 mm)	20" (5078 mm)
C	14" (356 mm)	14" (356 mm)
L	70" (1778 mm)	70" (1778 mm)

	APPLIANCE CLEARANCES WITH DOUBLE WALL PIPE CONNECTOR	
	Canada	**USA**
A	8" (203 mm)	8" (203 mm)
B	20" (508 mm)	20" (508 mm)
C	12" (305 mm)	12" (305 mm)
L	70" (1778 mm)	70" (1778 mm)

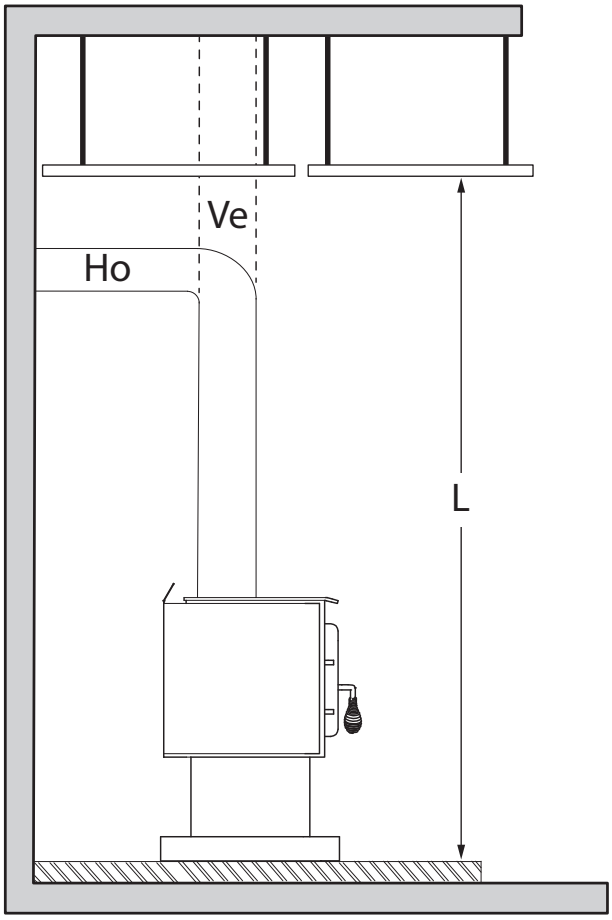

If the above clearances are met, then the distances measured from the flue outlet will be:

	DISTANCES[1] FROM PIPE CONNECTOR WITH SINGLE WALL PIPE CONNECTOR	
	Canada	**USA**
D	18" (457 mm)	18" (457 mm)
E	28 ¾" (730 mm)	28 ¾" (730 mm)
F	23 ¾" (603 mm)	23 ¾" (603 mm)

	DISTANCES[1] FROM PIPE CONNECTOR WITH DOUBLE WALL PIPE CONNECTOR	
	Canada	**USA**
D	11 ½" (292 mm)	11 ½" (292 mm)
E	28 ¾" (730 mm)	28 ¾" (730 mm)
F	21 ¾" (552 mm)	21 ¾" (552 mm)

ENGLISH

[1] The pipe distances listed in this table refer to the distances obtained when the stove is installed in accordance with the appliance clearances above mentioned.

3.1.3 With Heat Shield AC02762 and Lowered Ceiling

To reduce the clearances of an appliance using a single wall pipe connector, the use of a heat shield certified with the single wall pipe connector to be used as close as 6" from combustible materials must be used. Only in this case, the same clearances as a certified double wall pipe connector can be used. Refer to the booklet in the screen options to obtain the dimensions to be respected.

	APPLIANCE CLEARANCES WITH DOUBLE WALL PIPE CONNECTOR	
	Canada	**USA**
A	5" (127 mm)	5" (127 mm)
B	3" (76 mm)	3" (76 mm)
C	3 ½" (89 mm)	3 ½" (89 mm)
L	73" (1854 mm)	73" (1854 mm)

	DISTANCES[1] FROM PIPE CONNECTOR WITH DOUBLE WALL PIPE CONNECTOR	
	Canada	**USA**
D	8 ½" (216 mm)	8 ½" (216 mm)
E	11 ¾" (298 mm)	11 ¾" (298 mm)
F	13 ¼" (337 mm)	13 ¼" (337 mm)

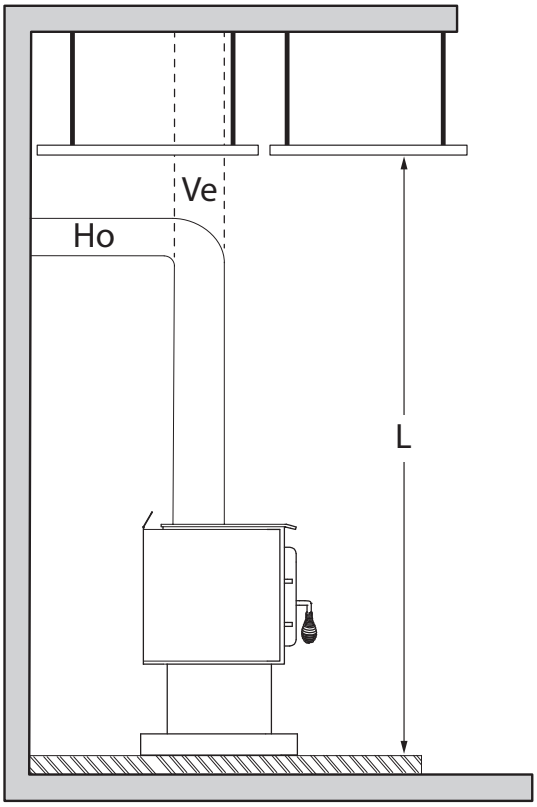

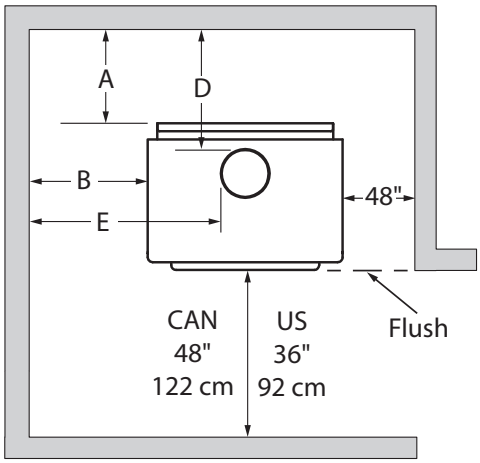

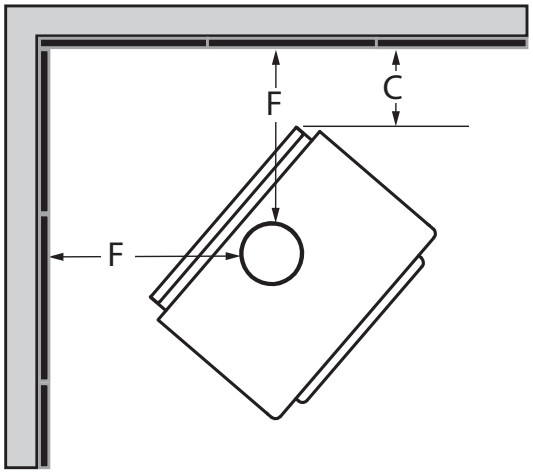

If the clearance reduction is on the same side as the door handle, position the stove at a minimum of 6 inches from the side wall (clearance B), otherwise it may be located at the clearance shown in the table above.

[1] The pipe distances listed in this table refer to the distances obtained when the stove is installed in accordance with the appliance clearances above mentioned.

ENGLISH

3.1.4 Inside a Combustible Alcove

See section 3.1 for the single wall pipe installation.

	APPLIANCE CLEARANCES WITH DOUBLE WALL PIPE CONNECTOR	
	Canada	**USA**
A	10" (254 mm)	10" (254 mm)
B	23" (584 mm)	23" (584 mm)
K	48" (1219 mm)	36" (914 mm)
L	70" (1778 mm)	70" (1778 mm)

	DISTANCES[1] FROM PIPE CONNECTOR WITH DOUBLE WALL PIPE CONNECTOR	
	Canada	**USA**
D	13 ½" (343 mm)	13 ½" (343 mm)
E	31 ¾" (806 mm)	31 ¾" (806 mm)

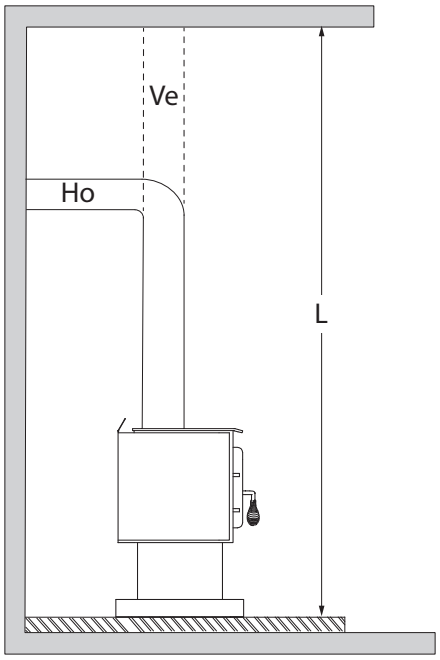

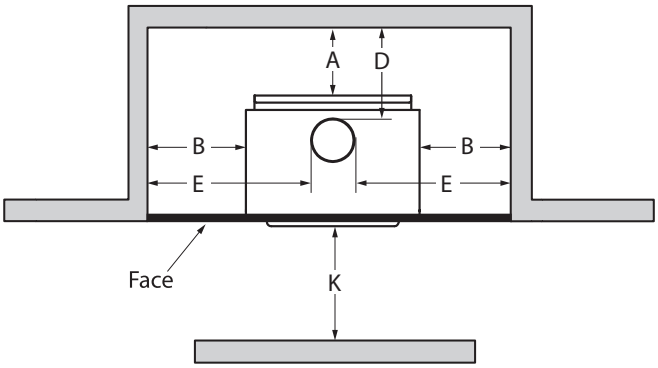

3.1.5 Mobile Home

It is strictly **forbidden** to install a unit with **a single wall pipe** in a **mobile home**.

	APPLIANCE CLEARANCES WITH DOUBLE WALL PIPE CONNECTOR	
	Canada	**USA**
A	7 ½" (191 mm)	7 ½" (191 mm)
B	24" (610 mm)	24" (610 mm)
C	12" (305 mm)	12" (305 mm)

	DISTANCES[1] FROM PIPE CONNECTOR WITH DOUBLE WALL PIPE CONNECTOR	
	Canada	**USA**
D	11" (279 mm)	11" (279 mm)
E	32 ¾" (832 mm)	32 ¾" (832 mm)
F	21 ¾" (552 mm)	21 ¾" (552 mm)

[1] The pipe distances listed in this table refer to the distances obtained when the stove is installed in accordance with the appliance clearances above mentioned.

ENGLISH

3.1.6 Mobile Home With Heat Shield AC02762

It is strictly **forbidden** to install a unit with **a single wall pipe** in a **mobile home**.

	APPLIANCE CLEARANCES WITH DOUBLE WALL PIPE CONNECTOR	
	Canada	**USA**
A	3 ½" (89 mm)	3 ½" (89 mm)
B	7 ½" (191 mm)	7 ½" (191 mm)
C	5 3/8" (137 mm)	5 3/8" (137 mm)

	DISTANCES[1] FROM PIPE CONNECTOR WITH DOUBLE WALL PIPE CONNECTOR	
	Canada	**USA**
D	7" (178 mm)	7" (178 mm)
E	16 ¼" (413 mm)	16 ¼" (413 mm)
F	15 1/8" (384 mm)	15 1/8" (384 mm)

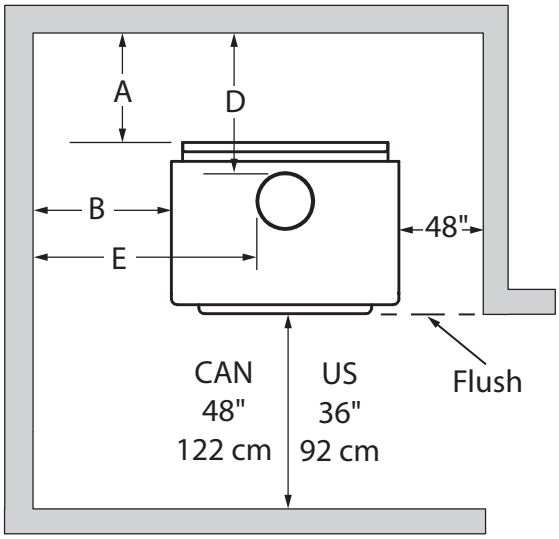

ENGLISH

[1] Les distances de tuyau listées dans ce tableau se réfèrent aux distances obtenues lorsque le poêle est installé en accord avec les dégagements de l'appareil mentionnés ci-dessus.

4. Floor Protection

This stove is meeting the requirements of CAN/ULC-S627 and is suitable for installation on a combustible floor. However, it must be placed on a non-flammable surface to protect the floor from hot embers that may fall during loading.

The floor protection must be a continuous, non combustible material, such as steel with a minimum thickness of 0.015" (0.38 mm) or ceramic tiles sealed together with grout. Cement board, brick, or any other approved or listed material suited for floor protection. No R factor required.

Any type of tile will require a continuous non combustible sheet beneath to prevent the possibility of embers falling through to the combustible floor if cracks or separation should occur in the finished surface. Check local codes for approved alternatives. No protection is required if the unit is installed on a non-combustible floor (ex: concrete).

	FLOOR PROTECTION	
	Canada[1]	**USA**
G[2]	8" (203 mm)	N/A
H	8" (203 mm)	N/A
I	18" (457 mm) From door opening	16" (406 mm) From door opening
J	N/A	8" (203 mm)
K	40 ¼" (1022 mm)	30 ½" (775 mm)
N[3]	N/A	See note 3
S	54" (1372 mm)	44" (1118 mm)
T	38 1/8" (968 mm)	31 1/8" (791 mm)
U	40 ¼" (1022 mm)	30 ½" (775 mm)
V	74 1/8" (1883 mm)	59 ¼" (1505 mm)

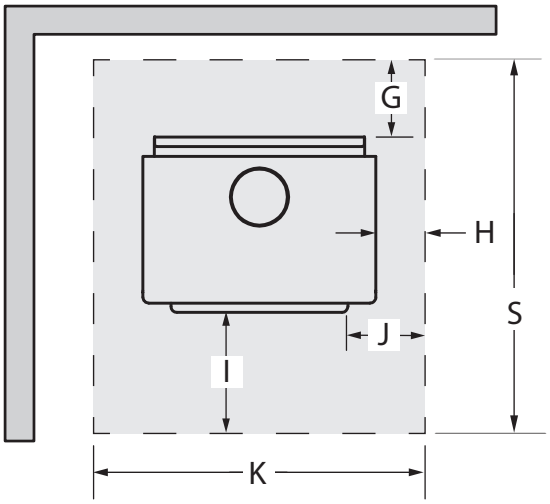

Figure 19: Floor Protection

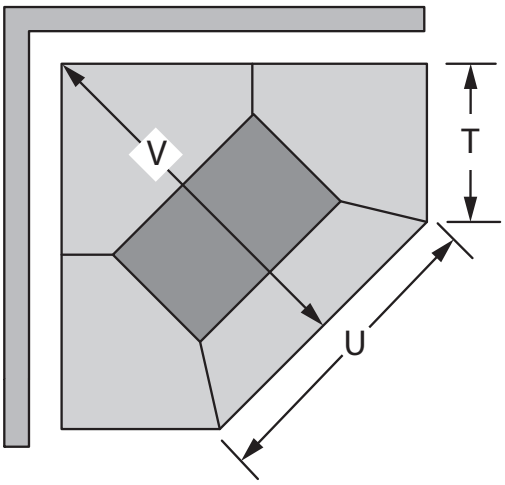

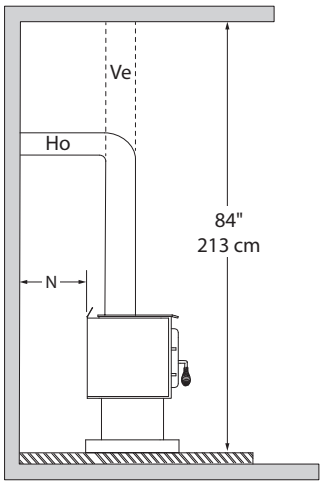

[1] In Canada, to comply with CSA B365, Installation Code for Solid-Fuel-Burning Appliances and Equipment, any combustible covering beneath the appliance and/or within the area extending horizontally at least 450 mm (18 in) beyond the appliance on any side equipped with a door, and at least 200 mm (8 in) beyond the appliance on other sides, shall be protected by a continuous, durable, non-combustible pad that will ember protection. The 450 mm (18 in) ember protection required on any side with a door shall extend for the full width of the appliance plus the 200 mm (8 in) required on each side of the appliance without a door. Where the appliance is installed less than 200 mm (8 in) from a wall, the ember pad need only extend to the base of the wall. An ember pad shall not be placed on top of a carpet unless the pad is structurally supported to prevent displacement and distortion.

[2] The floor protection at the back of the stove is limited to the stove's required clearance if such clearance is smaller than 8 inches (203 mm).

[3] Only required under the horizontal section (Ho) of the connector. Must exceed each side of the connector by at least 2 inches (51 mm).

ENGLISH

5. Reducing Wall and Ceiling Clearances Safely

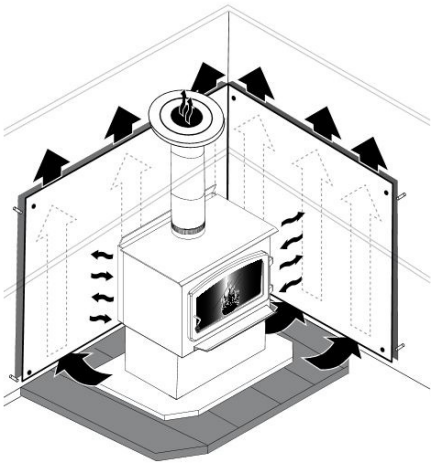

It is often desired to use as little space as possible when installing a wood stove. To do this, it is possible to reduce the clearances safely and install the stove closer to the walls by permanently installing a heat shield between the stove and the flammable material.

The rules for heat shields are sometimes complicated. Read and apply the instructions carefully. Some regions may have different regulations. Consult the local building code or contact the fire department for restrictions, inspection and installation requirements in the area.

Warning: To reduce the clearances of an appliance using a single wall pipe connector, the use of a heat shield certified with the single wall pipe connector to be used as close as 6" from combustible materials must be used. Only in this case, the same clearances as a certified double wall pipe connector can be used. Refer to the booklet in the screen options to obtain the dimensions to be respected.

5.1 Shield Construction Rules

- Adhesives used in shield construction must not ignite or lose adhesive qualities at temperatures likely to be encountered.
- Mounting hardware which extends from the shield surface into combustibles may be used only at the edges of the shield.
- Mounting hardware must allow full vertical ventilation.

A) Minimum clearance between the appliance top and an unshielded combustible ceiling: 36 ½" (927 mm)

B) Shield extension above the appliance: 20" (500 mm)

C) Minimum space behind the shield: 1" (25 mm). In Canada 7/8" (21 mm)

D) Clearance along the bottom of the shield: minimum 1" (25 mm) and maximum 3" (75 mm)

E) Minimum clearance along the top of the shield: 3" (75 mm)

F) Mounting hardware must not be located closer than 8" (200 mm) from the vertical centre line of the appliance.

G) Edge clearance for ceiling shields to side and back walls: 3" (75 mm)

H) Shield extension beyond each side of the appliance: 18" (450 mm)

ENGLISH

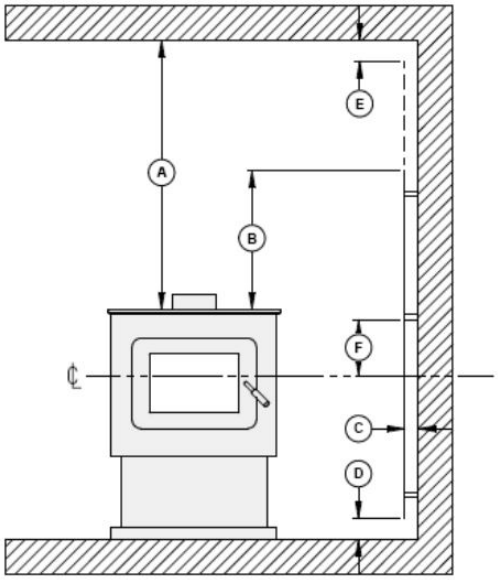

Figure 20: Heat shield clearances

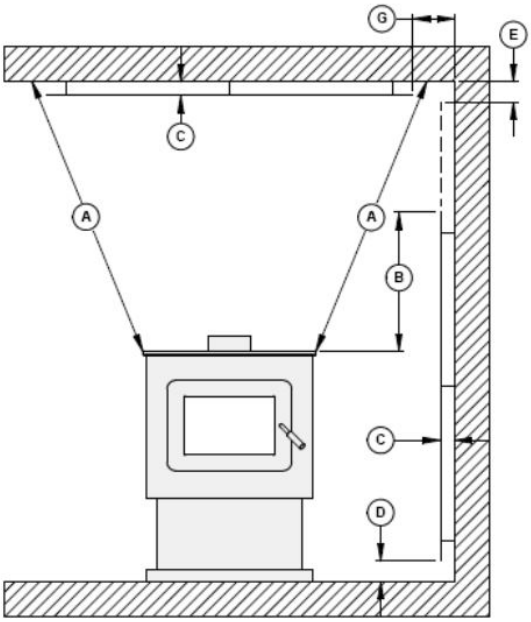

Figure 21: Heat shield clearances

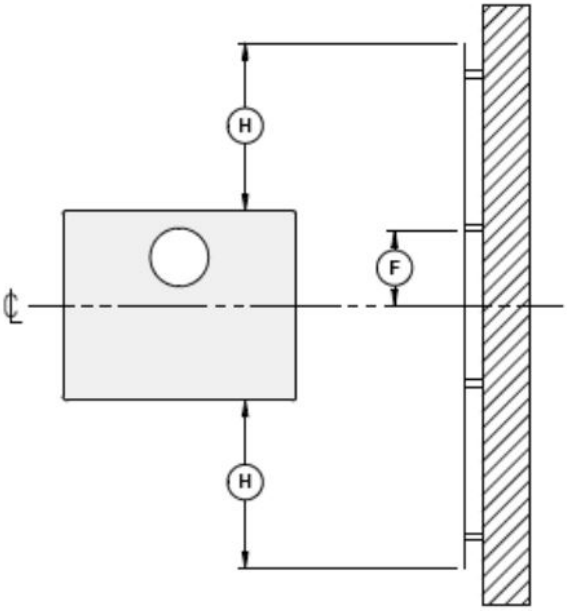

Figure 22: Heat shield clearances

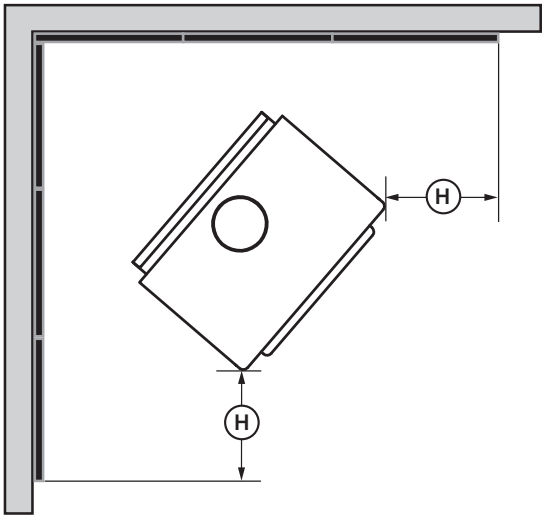

Figure 23: Heat shield clearances

ENGLISH

TYPE OF SHIELD	CLEARANCES MAY BE REDUCED BY THESE PERCENTAGES				
	SIDES AND REAR		TOP (CEILING)		
	CAN / USA (%)	USA MIN.	CAN / USA (%)	USA MIN.	
Sheet metal, a minimum of 24 gauge (0.61 mm) in thickness , spaced out at least 1" (25 mm)* by non-combustible spacers	67	12" (305 mm)	50	18" (457 mm)	
Ceramic tiles, or equivalent non-combustible material, on non-combustible board spaced out at least 1" (25 mm)* by non-combustible spacers	50	18" (457 mm)	33	24" (610 mm)	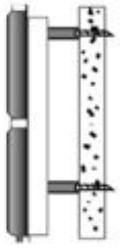
Ceramic tiles, or equivalent non-combustible material, on non-combustible board, with a minimum of 24 gauge (0.61 mm) sheet metal backing spaced out at least 1" (25 mm)* by non-combustible spacers	67	12" (305 mm)	50	24" (610 mm)	
Brick, spaced out at least 1" (25 mm)* by non-combustible spacers	50	18" (457 mm)	N/A	N/A	
Brick, with a minimum of 24 gauge (0.61 mm) sheet metal backing, spaced out at least 1" (25 mm)* by non-combustible spacers	67	12" (305 mm)	N/A	N/A	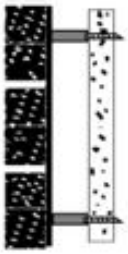

* In Canada this space can be ⅞" (21 mm)

ENGLISH

6. INSTALLATION OF OPTIONS ON YOUR PRODUCT

6.1 Optional Fresh Air Intake Kit Installation

The configuration of this appliance do not allow the air instake to be installed underneath the pedestal. It can only be installed on the back.

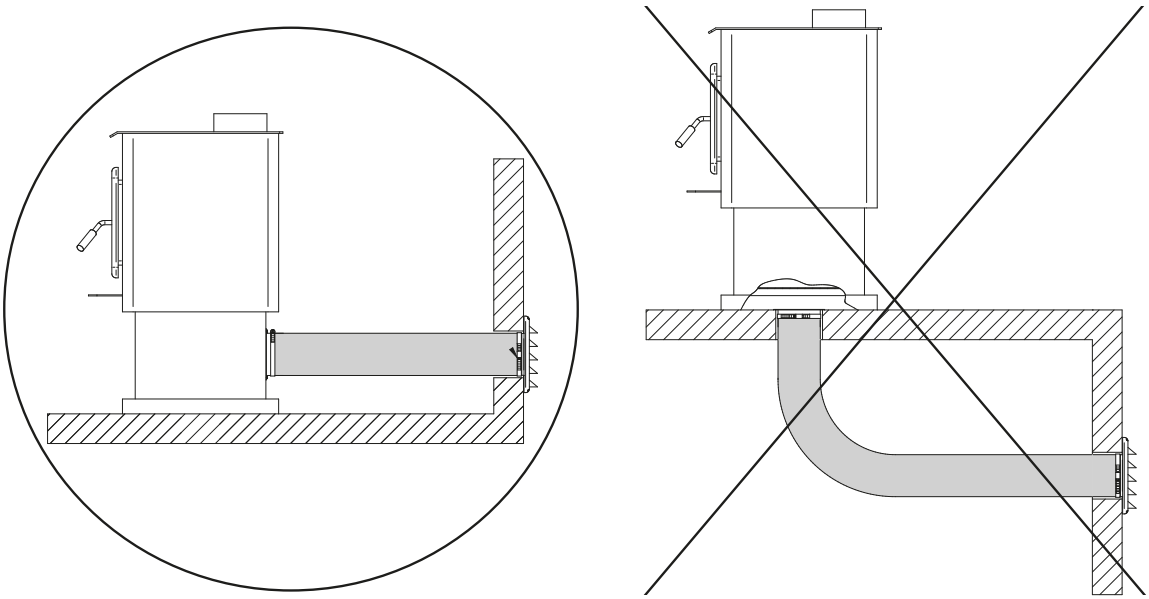

This mobile home approved stove requires the installation of a fresh air intake kit **(A)** and an insulated fresh air intake pipe (HVAC type, must meet ULC S110 or UL 181 class 0 or class 1) **(B)**, sold separately. Refer to air intake kit installation instructions for more details.

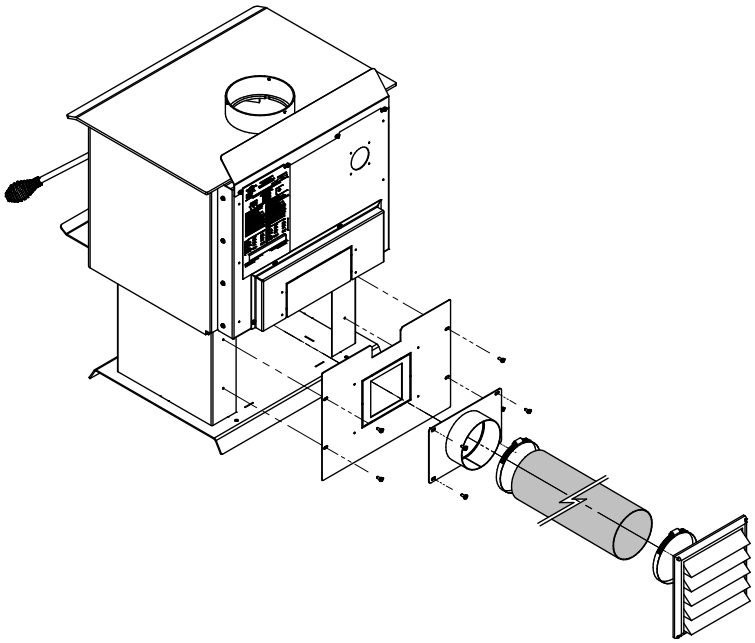

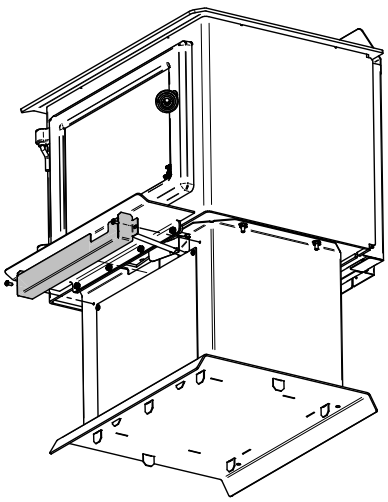

ENGLISH

6.2 Optional Fire Screen Installation

In the United States or in provinces with a particulate emission limit (eg. US EPA), the use of wood stoves with the door open with a rigid firescreen is prohibited.

It is prohibited to use this wood stove with a fire screen in a mobile home.

1. Open the door.

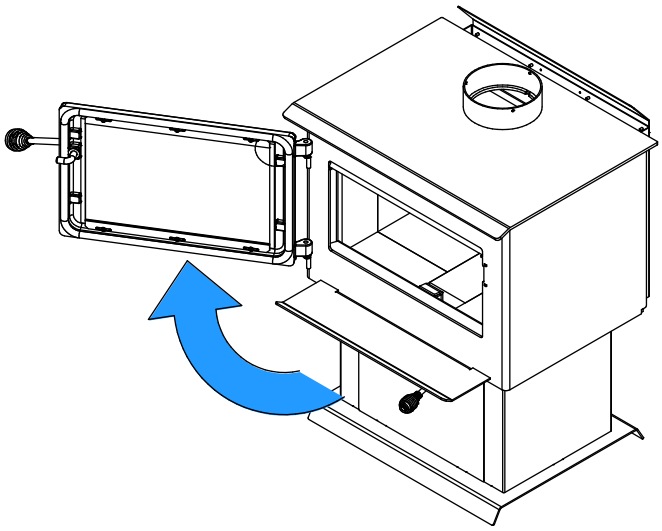

2. Hold the fire screen by the two handles and bring it close to the door opening.

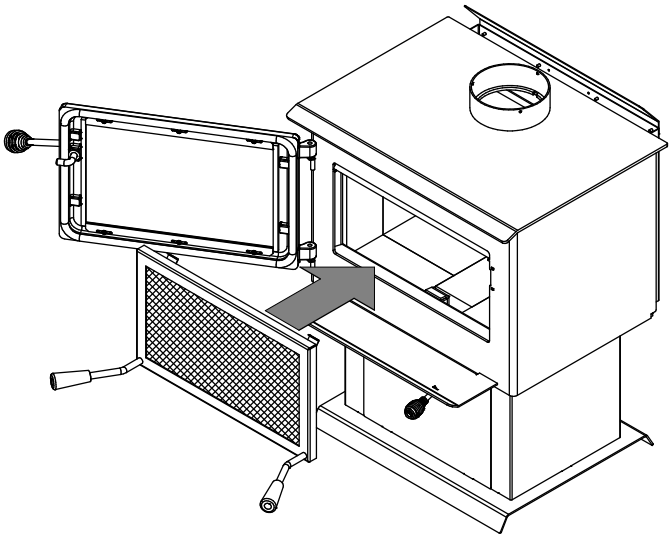

3. Lean the upper part of the fire screen against the top door opening making sure to position the top fire screen brackets behind the primary air deflector.
4. Lift the fire screen upwards and push the bottom part towards the stove then let the fire screen rest on the bottom of the door opening.

Warning: Never leave the stove unattended while in use with the fire screen.

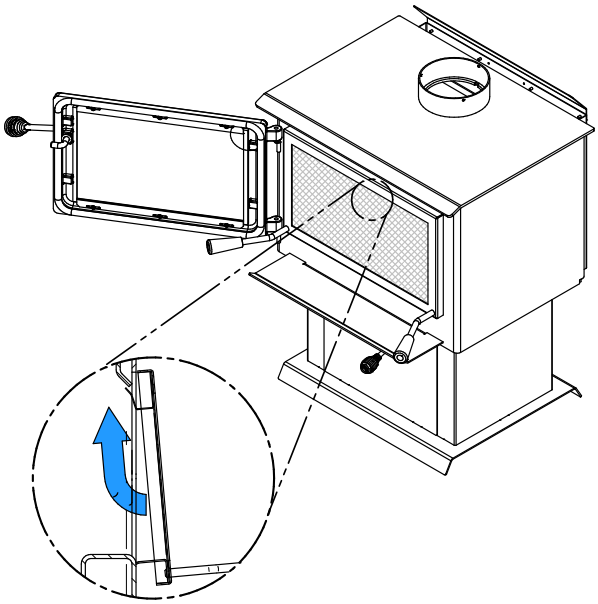

ENGLISH

6.3 Optional Blower Installation

A blower, sold separately, can be installed on the stove.

1. Remove the backplate by cutting the knockouts with pliers.

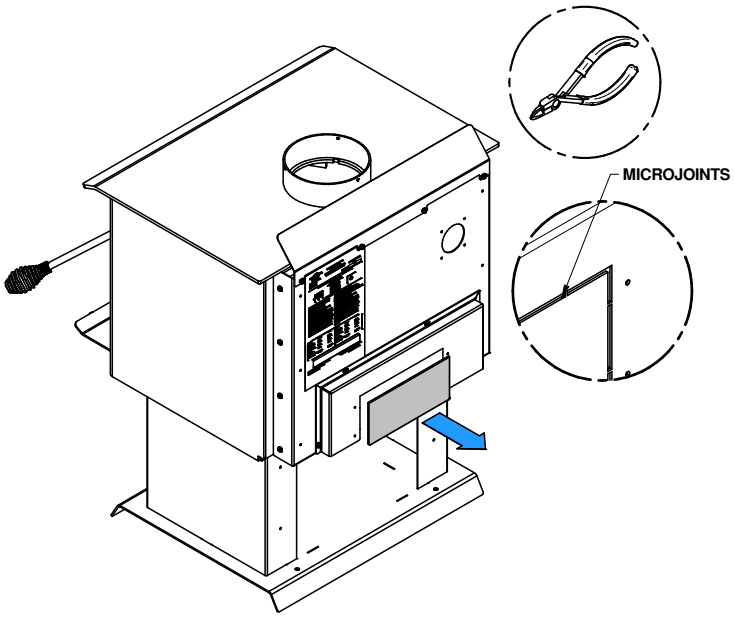

2. Screw the blower **(A)** in place using the screws **(B)** included in the installation manual. **Ensure that the blower's power cord is not in contact with any surface of the stove to prevent electrical shock or fire damage. Do not run the power cord beneath the stove.**

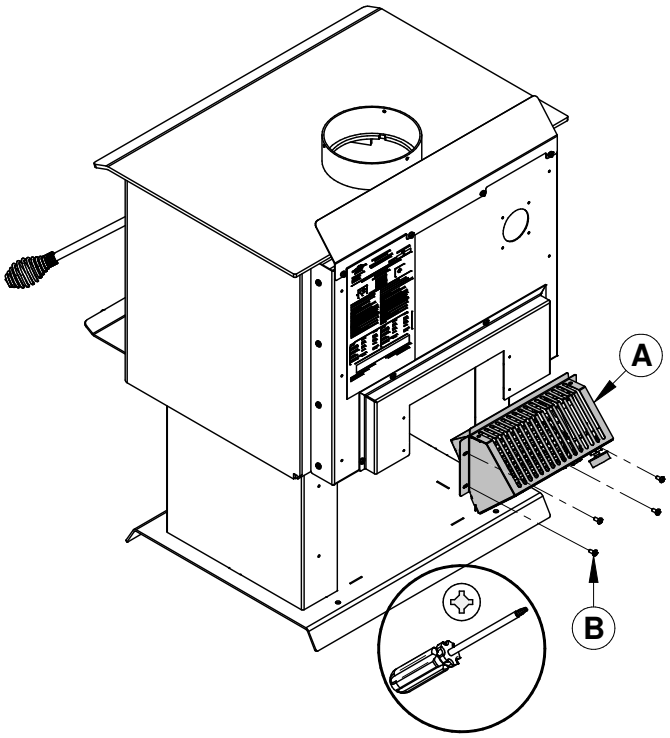

ENGLISH

6.4 Optional Thermodisc Installation

A thermodisc, sold separately, can be installed on the stove. Thermodisc allows the blower to operate only when the stove is hot enough. See the instructions provided with the thermodisc for more details.

1. Screw the thermodisc **(A)** with the screws **(B)** supplied with the thermodisc on the back of the stove. **The electrical cord of the thermodisc should not touch any surface of the stove to avoid electric shock or fire. Do not run the power cord under the stove.**

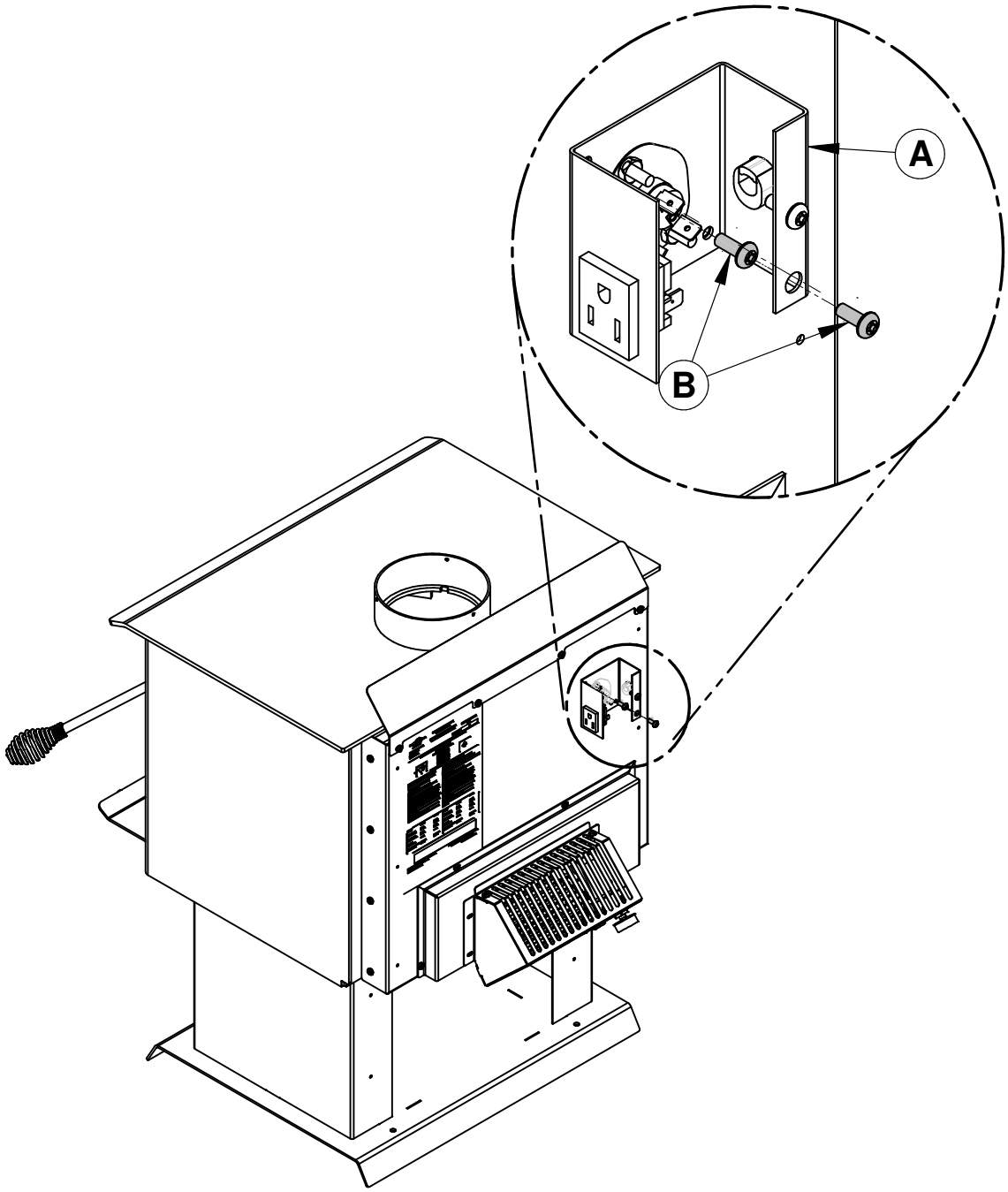

ENGLISH

6.5 Optional Ash Pan Installation

A ash pan, sold separately, can be installed on the stove.

1. Remove the metal plate (C) and the refractory brick (A).

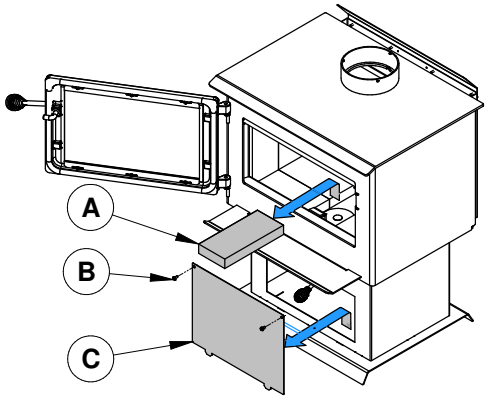

2. Unscrew the two metal rounds using an adjustable wrench.

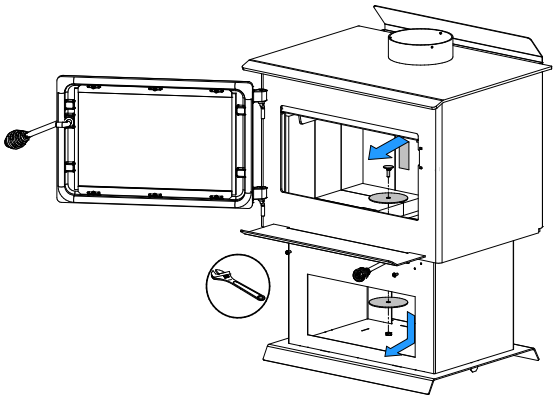

3. Using a hammer, remove the third metal rounds.

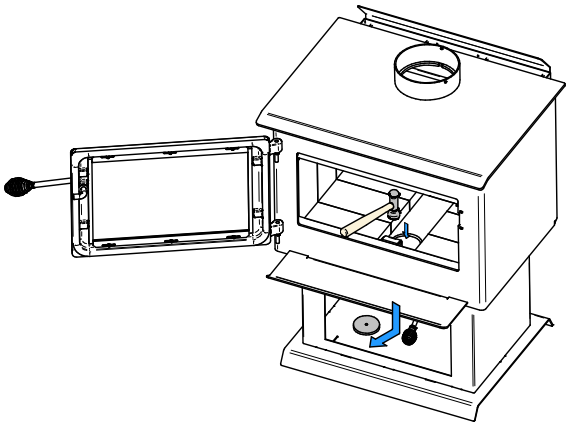

4. Place the ash pan support (A) in the bottom of the base of the stove.

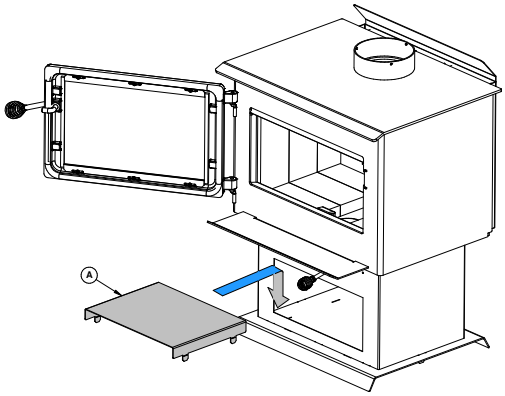

5. Place the refractory brick (A), the ash plug (B) and the ash pan (C).

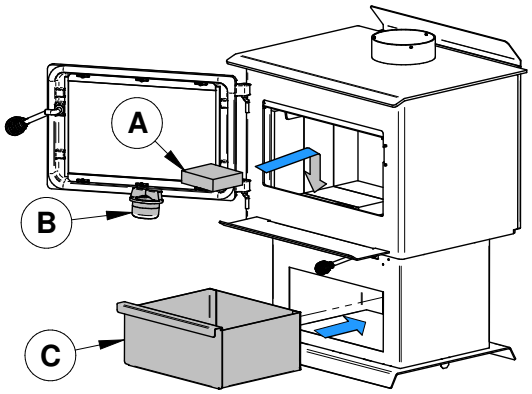

6. Screw the metal plate (A) behind the stove.

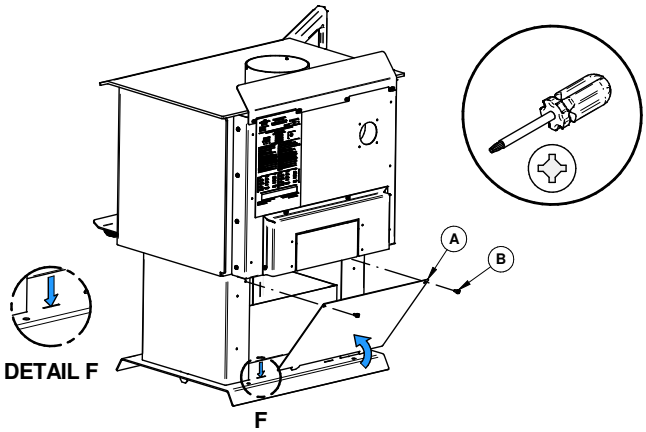

ENGLISH

6.6 Air Tubes And Baffle Installation

1. Starting with the rear tube, lean and insert the right end of the secondary air tube into the rear right channel hole. Then lift and insert the left end of the tube into the rear left channel.

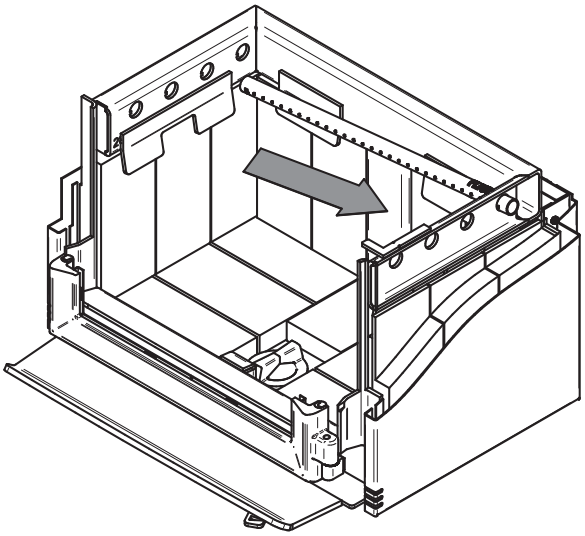

2. Align the notch in the left end of the tube with the key of the left air channel hole. Using a « Vise grip » hold the tube and lock it in place by turning the tube as shown. Make sure the notch reaches the end of the key way.

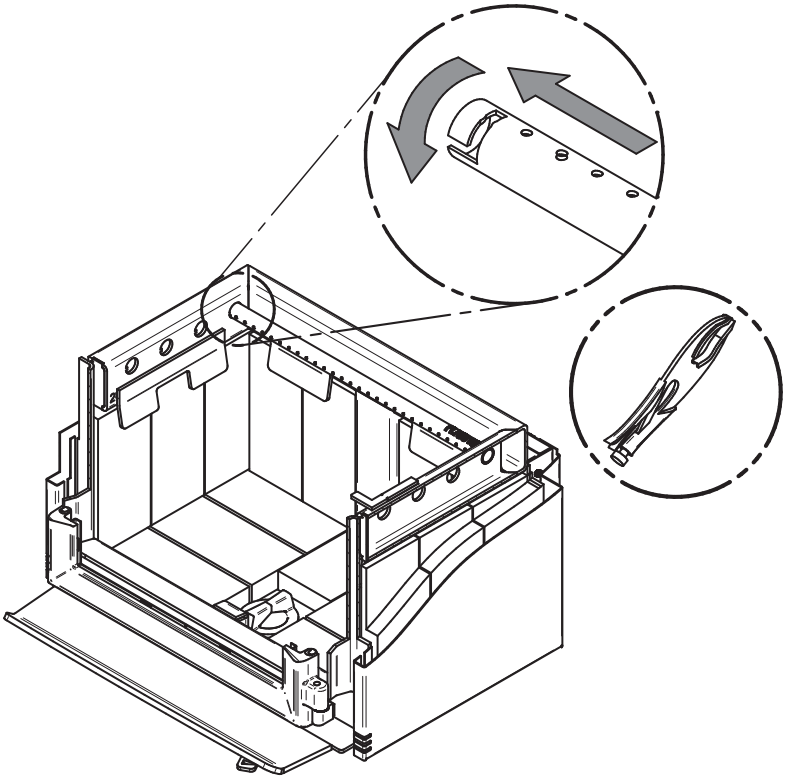

3. Put the baffle in place.
4. Repeat steps 1 and 2 for the three other tubes.
5. To remove the tubes use the above steps in reverse order.

ENGLISH

Note that secondary air tubes **(B)** *can be replaced without removing the baffle board* **(A)** *and that all tubes are not necessarely identical (look at the part number on the tube).*

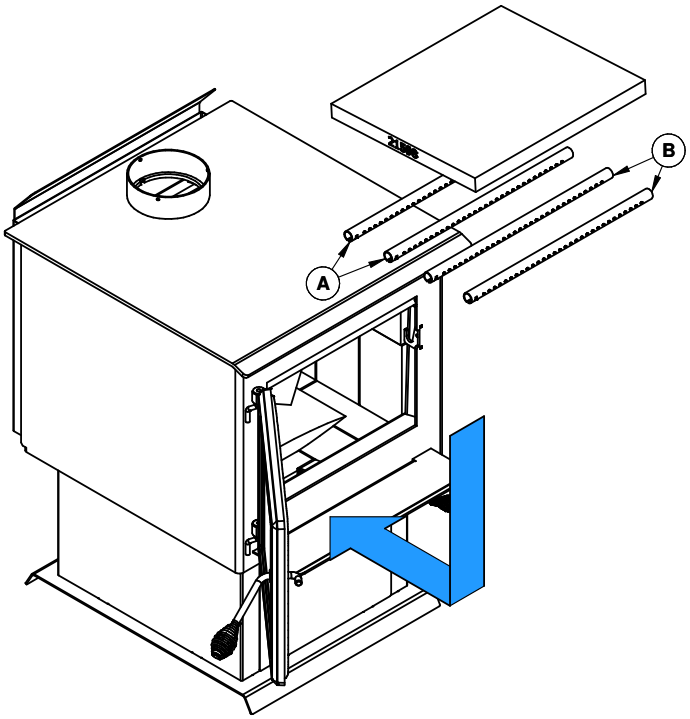

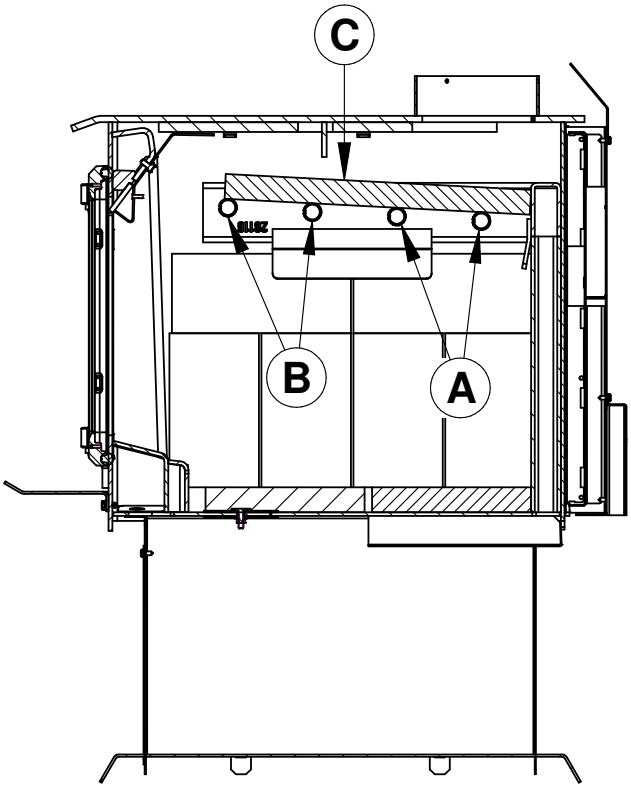

ENGLISH

6.7 Mobile Home Installation

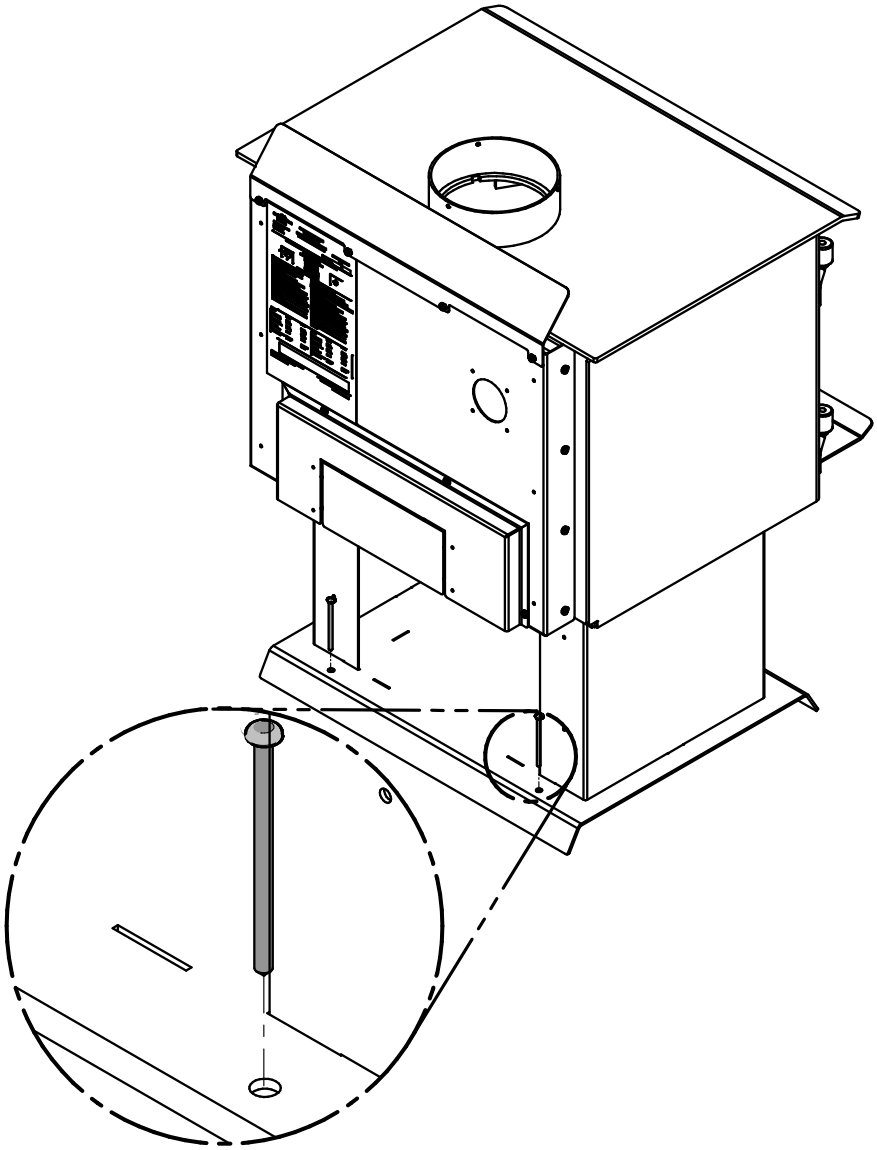

ENGLISH

7. Maintenance/Parts Replacement

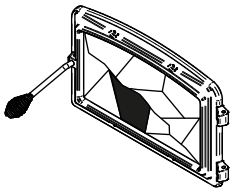

Do not clean the glass when the stove is hot.

Do not abuse the glass door by striking or slamming shut.

Do not use the stove if the glass is broken.

7.1 Replacement

The glass used is a ceramic glass, 5/32" (4 mm) thick, tested to reach temperatures up to 1400° F. The dimensions of the glass are 14 ¾" x 12 ¾". If the glass breaks, it must be replaced by a ceramic glass from SCHOTT with the same specification. Contact your dealer to obtain a genuine replacement part.

WARNING : DO NOT USE SUBSTITUTE MATERIALS WHEN REPLACING THE GLASS.

To remove or replace the glass (D):

THE IMAGES SHOWN ARE FOR GUIDANCE ONLY AND MAY BE DIFFERENT FROM YOUR PRODUCT, BUT THE ASSEMBLY REMAINS THE SAME.

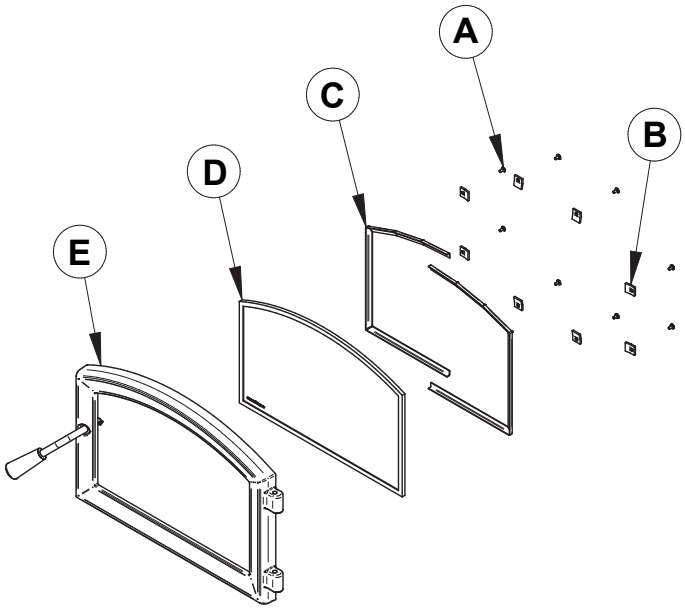

1. Remove the door **(E)** from its hinges and lay it on a soft, flat surface.
2. Remove the eight screws **(A)**, the eight glass retainers **(B)**, and the metal frames **(C)**.
3. Remove the glass **(D)**. If it is damaged install a new one in place. The replacement glass must have a gasket all around (see procedure below).
4. Reinstall the glass, being careful to centre the glass in the door and not to over-tightening the retaining screw.

The two main causes of broken door glass are uneven placement in the door and over-tightening the retaining screws.

ENGLISH

7.2 Gasket

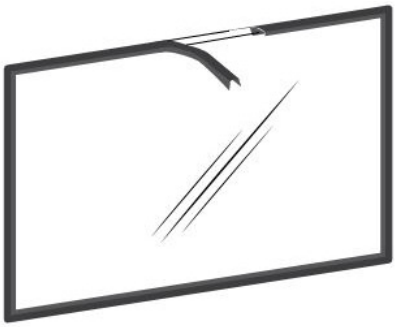

The glass gasket is flat, adhesive-backed, woven fibreglass. The gasket must be centred on the edge of the glass.

1. Follow the steps of the previous section to remove the glass.
2. Remove the old gasket and clean the glass thoroughly.
3. Peel back a section of the paper covering the adhesive and place the gasket on a table with the adhesive side up.
4. Stick the end of the gasket to the middle of one edge, then press the edge of the glass down onto the gasket, taking care that it is perfectly centred on the gasket.
5. Peel off more of the backing and rotate the glass. The gasket must not be stretched during installation.
6. Cut the gasket to the required length.
7. Pinch the gasket onto the glass in a U shape, all around the glass.

By following these instructions, the edge clearances are maintain.

7.3 Door

In order for the stove to burn at its best efficiency, the door must provide a perfect seal with the firebox. The tightness of the door seal can be verified by closing and latching the door on a strip of paper. The test must be performed all around the door. If the paper slips out easily anywhere, either adjust the door or replace the gasket.

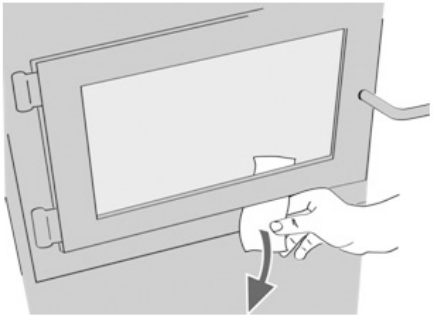

7.3.1 Adjustment

In order for the stove to burn at its best efficiency, the door must provide a perfect seal with the firebox. Therefore, the gasket should be inspected periodically to check for a good seal. The gasket seal may be improved with a simple latch mechanism adjustment:

1. Remove the split pin by pulling and turning it using pliers.
2. Turn the handle one counterclockwise turn to increase pressure.
3. Reinstall the split pin with a small hammer.

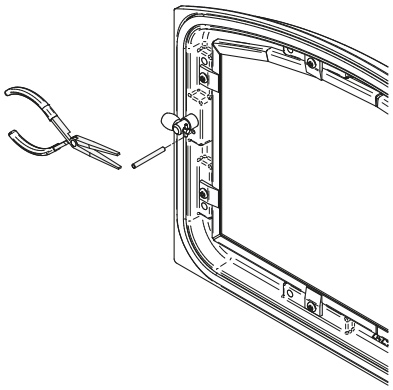

Figure 24: Removing the split pin

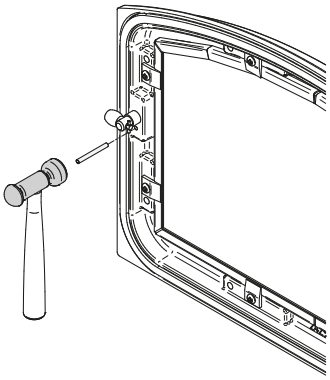

Figure 25: Installing the split pin

ENGLISH

7.3.2 Door Alignment

To align, open the door and loosen the pressures screws located on the lower and upper hinges of the door using a 3/32” Allen key to free the adjustable hinge rods.

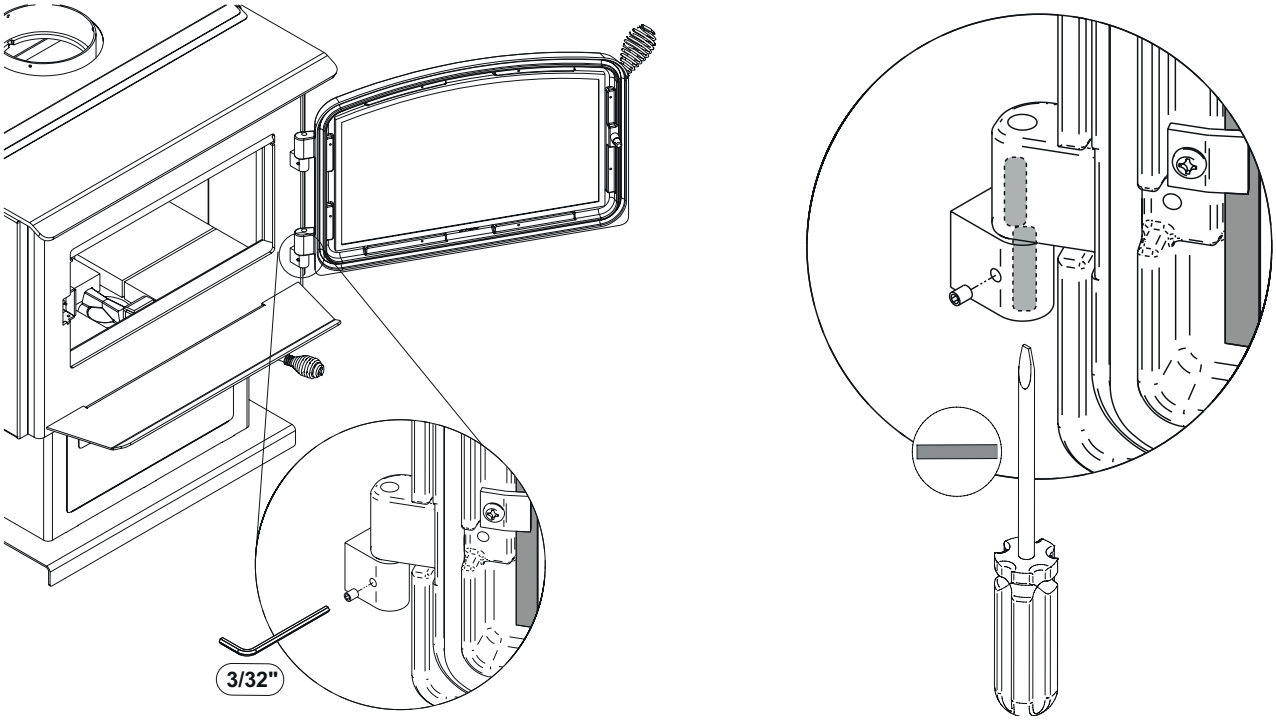

Using a flat screwdriver, turn the adjustable hinge rods in the direction shown to adjust the doors. Tighten all door hinge pressure screws when they are at the desired positions. Configurations 1-2-3-4-5-6, show in which direction these act on the adjustment of the door.

①		②		③		④	
	A		A		A		A
	B		B		B		B

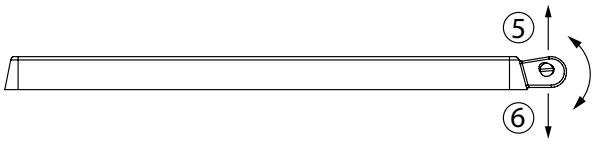

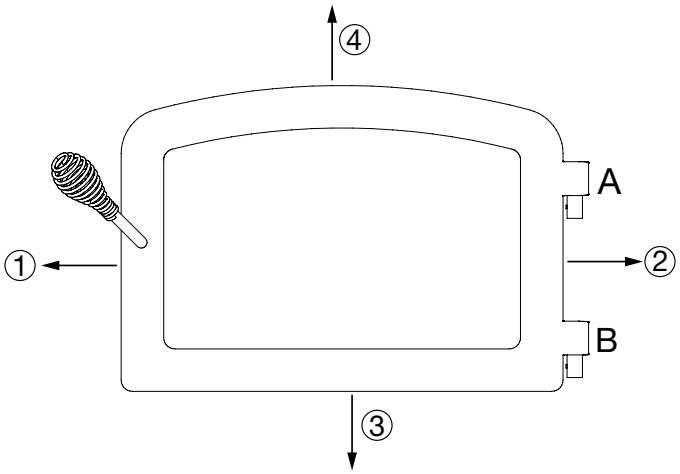

ENGLISH

7.3.3 Gasket

It is important to replace the gasket with another having the same diameter and density to maintain a good seal.

1. Remove the door and place it face-down on something soft like a cushion of rags or a piece of carpet.
2. Remove the old gasket from the door. Use a screwdriver to scrape the old gasket adhesive from the door gasket groove.
3. Apply a bead of approximately 3/16" (5 mm) of high temperature silicone in the door gasket groove. Starting from the middle, hinges side, press the gasket into the groove. The gasket must not be stretched during installation.
4. Leave about ½" long of the gasket when cutting and press the end into the groove. Tuck any loose fibers under the gasket and into the silicone.
5. Close the door. Do not use the stove for 24 hours.

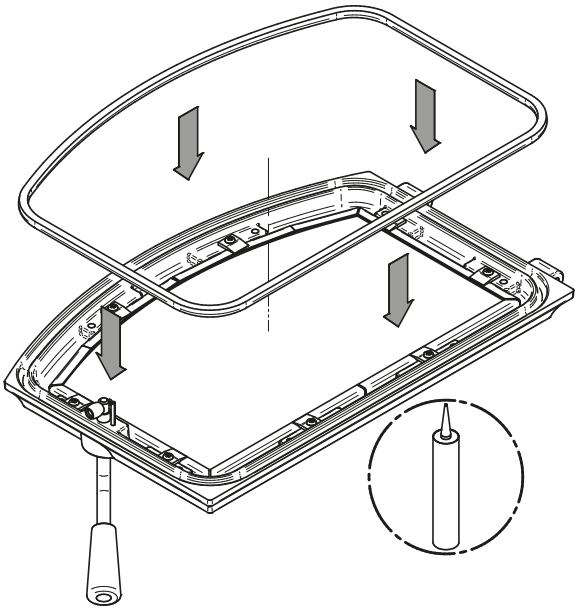

ENGLISH

8. Exploded Diagram and Parts List

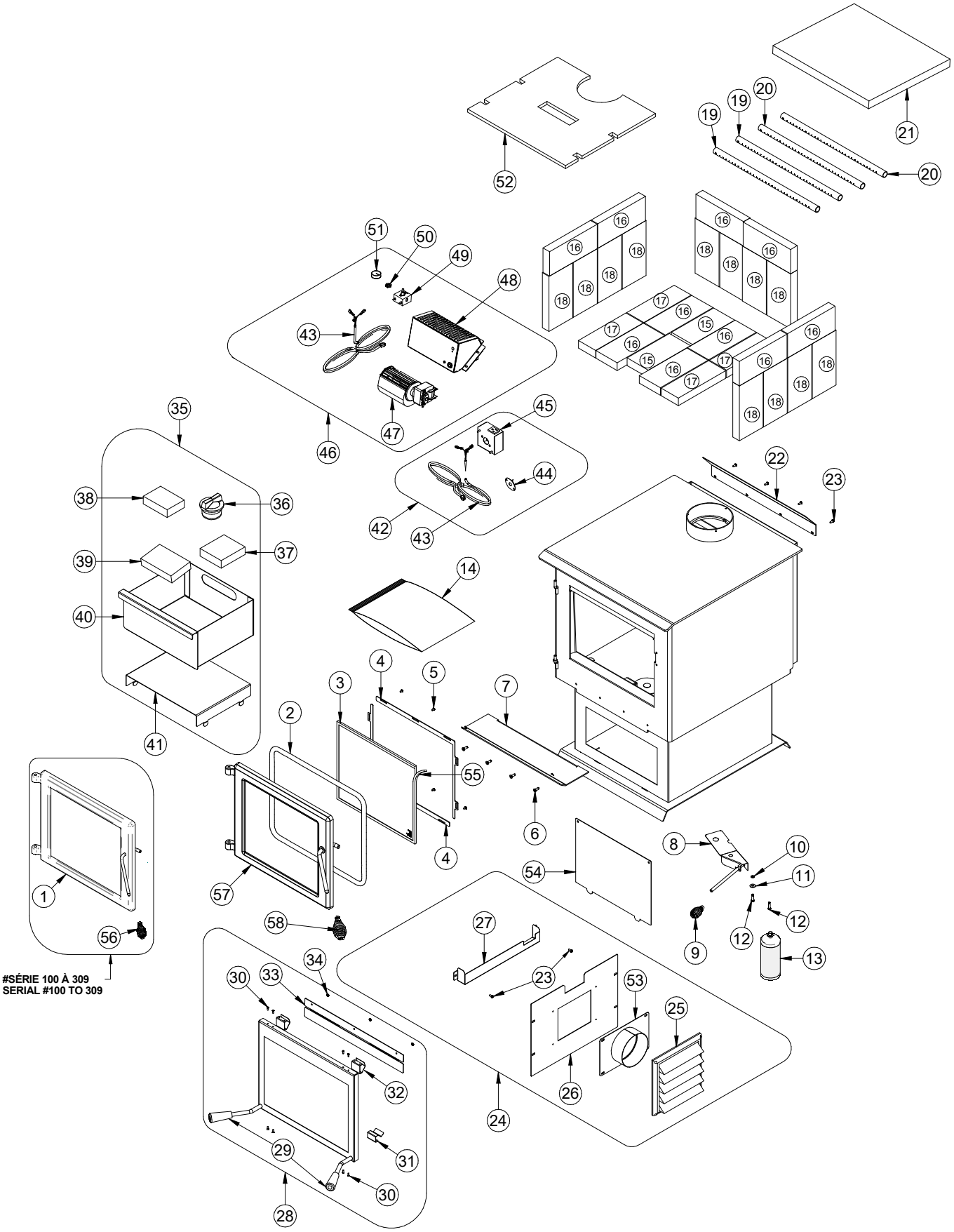

ENGLISH

IMPORTANT: THIS IS DATED INFORMATION. When requesting service or replacement parts for your unit, please provide the model number and the serial number. We reserve the right to change parts due to technology upgrades or availability. Contact an authorized dealer to obtain any of these parts. Never use substitute materials. Use of non-approved parts can result in poor performance and safety hazards.

#	Item	Description	Qty
1	SE24348	3.3 CENTURY DOOR ASSEMBLY	1
2	AC06500	SILICONE AND 5/8" X 8' BLACK DOOR GASKET KIT (AC-DGKNC)	1
3	SE74023	14 3/4'' x 12 3/4'' GLASS WITH GASKET	1
4	PL74066	GLASS RETAINER	2
5	30124	MECHANICAL SCREW #8-32 X 5/16" TRUSS QUADREX #2 ZINC	6
6	30507	BLACK TORX SCREW WITH FLAT HEAD TYPE F 1/4-20 X 3/4"	4
7	PL74003	ASH LIP	1
8	SE72530	AIR CONTROL DAMPER ASSEMBLY	1
9	AC07869	3/8" BLACK COIL HANDLE	1
10	30187	STAINLESS WASHER IØ 17/64" X OØ 1/2"	1
11	30206	ZINC WASHER 5/16"ID X 3/4"OD	1
12	30506	BLACK SCREW PAN TORX TYPE F 1/4-20 X 1"	1
13	AC05959	METALLIC BLACK STOVE PAINT - 342 g (12oz) AEROSOL	1
14	SE46191	FW3200 INSTRUCTION MANUAL KIT	1
15	29000	4'' X 8'' X 1 1/4'' REFRACTORY BRICK	2
16	29015	4'' X 9'' X 1 1/4'' REFRACTORY BRICK	10
17	29007	3 1/4'' X 9'' X 1 1/4'' REFRACTORY BRICK	4
18	29010	4 1/2" X 9" X 1 1/4" REFRACTORY BRICK	12
19	PL72516	FRONT OR SECOND SECONDARY AIR TUBE	2
20	PL72515	THIRD OR REAR SECONDARY TUBE	2
21	21598	VERMICULITE BAFFLE	1
22	PL74052	AIR DEFLECTOR	1
23	30154	BLACK ZINC SCREW #10 X 5/8" QUADREX #2 TYPE A	6
24	AC02081	5"Ø FRESH AIR INTAKE KIT	1
25	49028	5" WHITE AIR INTAKE TERMINATION	1
26	PL74054	BACK OF THE BASE	1
27	PL74055	DECORATIVE PLATE	1
28	AC01397	RIGID FIRESCREEN	1
29	30898	ROUND WOODEN BLACK HANDLE	2
30	30021	SELF TAPPING SCREW 8-32 "F" TYPE X 7/16" FLAT HEAD QUADREX BLACK	8
31	PL72074	UPPER FIRESCREEN HOOK	2
32	PL72584	LOWER FIRESCREEN HOOK	2
33	PL72582	SMOKE DEFLECTOR	1

#	Item	Description	Qty
34	30417	BLACK HEX NUT #8-32	3
35	AC01099	ASH DRAWER KIT	1
36	24096	ROUND CAST IRON ASH PLUG	1
37	29004	4'' X 4 1/2'' X 1 1/4'' REFRACTORY BRICK	1
38	PL36760	3 1/4" X 4 1/2" X 1 1/4" REFRACTORY BRICK	1
39	PL36274	3 5/8" X 5 3/4" X 1 1/4" REFRACTORY BRICK	1
40	PL74056	ASH DRAWER	1
41	PL74004	DRAWER GUIDE	1
42	AC02055	QUICK CONNECT THERMODISC	1
43	60013	POWER CORD 96" X 18-3 type SJT (50 pcs per carton)	2
44	44028	CERAMIC THERMODISC F110-20F	1
45	PL05530-02	THERMODISC BOX (COVER)	1
46	AC02050	BLOWER ASSEMBLY WITH VARIABLE SPEED CONTROL (UP TO 100 CFM)	1
47	44073	CROSSFLOW BLOWER 115V-60Hz-39W 100 CFM	1
48	AC07868	1/2" BLACK COIL HANDLE	1
49	44080	RHEOSTAT WITHOUT NUT (MODEL KBMS-13BV)	1
50	44087	RHEOSTAT NUT	1
51	44085	RHEOSTAT KNOB	1
52	21594	C-CAST (V2) TOP INSULATION	1
53	SE65598	AIR INTAKE ADAPTER	1
54	PL74047	PEDESTAL FRONT COVER	1
55	AC06400	3/4" x 6' x 1/8" FLAT BLACK SELF-ADHESIVE GLASS GASKET (AC-GGK)	1

ENGLISH

CENTURY LIMITED LIFETIME WARRANTY

The warranty of the manufacturer extends only to the original retail purchaser and is not transferable. This warranty covers brand new products only, which have not been altered, modified nor repaired since shipment from factory.

This warranty applies to normal residential use only. This warranty is void if the unit is used to burn material other than cordwood (for which the unit is not certified by EPA) and void if not operated according to the owner's manual. Damages caused by misuse, abuse, improper installation, lack of maintenance, over firing, negligence or accident during transportation, power failures, downdrafts, venting problems or under-estimated heating area are not covered by this warranty. The recommended heated area for a given appliance is defined by the manufacturer as its capacity to maintain a minimum acceptable temperature in the designated area in case of a power failure.

This warranty does not cover any scratch, corrosion, distortion, or discoloration. Any defect or damage caused by the use of unauthorized or other than original parts voids this warranty. An authorized qualified technician must perform the installation in accordance with the instructions supplied with this product and all local and national building codes. Any reclamation related to an improper installation is not covered by this warranty.

The manufacturer may require that defective products be returned or that digital pictures be provided to support the claim. Returned products are to be shipped prepaid to the manufacturer for investigation. Transportation fees to ship the product back to the purchaser will be paid by the manufacturer. All parts costs covered by this warranty are limited according to the table below.

The manufacturer, at its discretion, may decide to repair or replace any part or unit after inspection and investigation of the defect. The manufacturer may, at its discretion, fully discharge all obligations with respect to this warranty by refunding the wholesale price of any warranted but defective parts. The manufacturer shall, in no event, be responsible for any uncommon, indirect, consequential damages of any nature, which are in excess of the original purchase price of the product. A one-time replacement limit applies to all parts benefiting from lifetime coverage. This warranty applies to products purchased after July 1st, 2020.

DESCRIPTION	WARRANTY APPLICATION*
	PARTS
Combustion chamber (welds only) and cast iron door frame.	5 years
Surrounds, heat shields, ash drawer, steel legs, pedestal and convector air-mate.	2 years
Removable stainless steel combustion chamber components, secondary air tubes**, deflectors and supports.	2 years
Glass retainers, handle assembly, and air control mechanism.	2 years
Carbon steel combustion chamber components, vermiculite baffle**and ceramic glass.	1 year
Blower, heat sensors, switches, rheostat, wiring, and other controls.	1 year
Firebricks, paint and gaskets.	-
Any parts replaced under the warranty (Except firebricks, paint and gaskets)	90 days

Subject to limitations above. **Picture required.

Shall your unit or a components be defective, contact immediately your CENTURY. To accelerate processing of your warranty claim, make sure to have on hand the following information when calling:

- Your name, address and telephone number;
- Installation configuration;
- Nature of the defect and any relevant information.
- Serial number and model name as indicated on the nameplate fixed to the back of your unit;

Before shipping your unit or defective component to our plant, you must obtain an Authorization Number from your CENTURY. Any merchandise shipped to our plant without authorization will be refused automatically and returned to sender.

ENGLISH

This document is available for free download on the manufacturer's website. It is a copyrighted document. Resale is strictly prohibited. The manufacturer may update this document from time to time and cannot be responsible for problems, injuries, or damages arising out of the use of information contained in any document obtained from unauthorized sources.

Stove Builder International inc.
250, rue de Copenhague,
St-Augustin-de-Desmaures (Québec) Canada
G3A 2H3
1-877-356-6663
https://www.century-heating.com/en/
tech@sbi-international.com